PREFACE

PROFESSIONAL TECHNICIAN SERIES Part of Pearson Automotive's Professional Technician Series, the fifth edition of *Automotive Electricity and Electronics* represents the future of automotive textbooks. The series is a full-color, media-integrated solution for today's students and instructors. The series includes textbooks that cover all 8 areas of ASE certification, plus additional titles covering common courses.

The series is also peer-reviewed for technical accuracy.

UPDATES TO THE FIFTH EDITION

- Over 60 new full-color photos and line drawings to make the subject come alive.
- Updated throughout and correlated to the latest ASE/NATEF tasks.
- New OSHA hazardous chemical labeling requirements added to Chapter 2.
- Additional explanations added to Chapter 4 about electrical circuits to make learning this important topic easier to understand.
- New content on three-legged and low profile fuses plus smart junction boxes added to Chapter 10.
- New content on immobilizer systems added to Chapter 26.
- Unlike other textbooks, this book is written so that the theory, construction, diagnosis, and service of a particular component or system is presented in one location. There is no need to search through the entire book for other references to the same topic.

NATEF CORRELATED NATEF-certified programs need to demonstrate that they use course material that covers NATEF tasks. All *Professional Technician* textbooks have been correlated to the appropriate NATEF task lists. These correlations can be found in two locations:

- As an appendix to each book.
- At the beginning of each chapter in the *Instructor's Manual*.

A COMPLETE INSTRUCTOR AND STUDENT SUPPLEMENTS PACKAGE All *Professional Technician* textbooks are accompanied by a full set of instructor and student supplements. Please see page vi for a detailed list of supplements.

A FOCUS ON DIAGNOSIS AND PROBLEM SOLVING

The Professional Technician Series has been developed to satisfy the need for a greater emphasis on problem diagnosis. Automotive instructors and service managers agree that students and beginning technicians need more training in diagnostic procedures and skill development. To meet this need and demonstrate how real world problems are solved, "Real World Fix" features are included throughout and highlight how real-life problems are diagnosed and repaired.

The following pages highlight the unique core features that set the Professional Technician Series book apart from other automotive textbooks.

IN-TEXT FEATURES

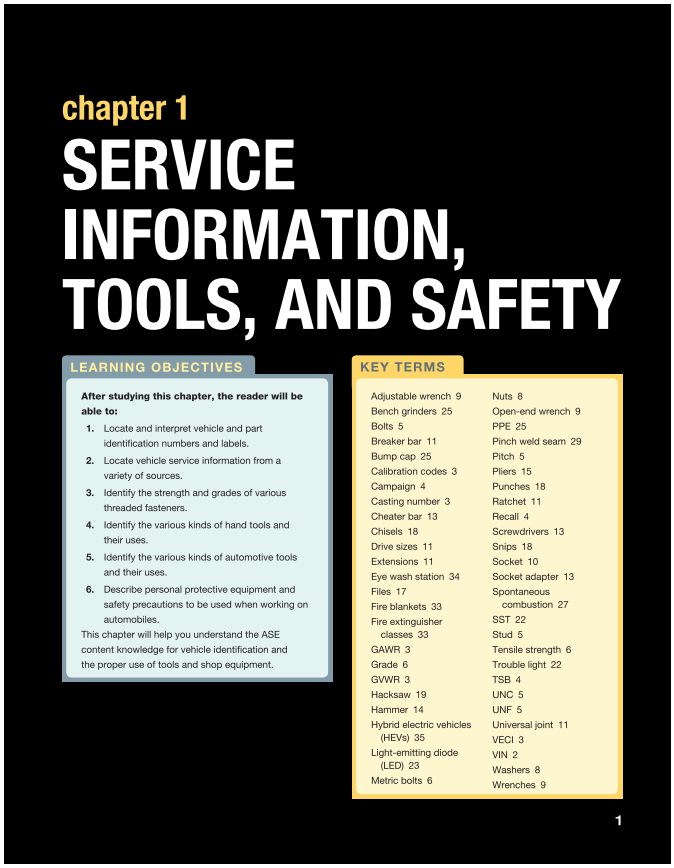

chapter 1

SERVICE INFORMATION, TOOLS, AND SAFETY

LEARNING OBJECTIVES

After studying this chapter, the reader will be able to:

1. Locate and interpret vehicle and part identification numbers and labels.
2. Locate vehicle service information from a variety of sources.
3. Identify the strength and grades of various threaded fasteners.
4. Identify the various kinds of hand tools and their uses.
5. Identify the various kinds of automotive tools and their uses.
6. Describe personal protective equipment and safety precautions to be used when working on automobiles.

This chapter will help you understand the ASE content knowledge for vehicle identification and the proper use of tools and shop equipment.

KEY TERMS

Adjustable wrench 9
Bench grinders 25
Bolts 5
Breaker bar 11
Bump cap 25
Calibration codes 3
Campaign 4
Casting number 3
Cheater bar 13
Chisels 18
Drive sizes 11
Extensions 11
Eye wash station 34
Files 17
Fire blankets 33
Fire extinguisher classes 33
GAWR 3
Grade 6
GVWR 3
Hacksaw 19
Hammer 14
Hybrid electric vehicles (HEVs) 35
Light-emitting diode (LED) 23
Metric bolts 6
Nuts 8
Open-end wrench 9
PPE 25
Pinch weld seam 29
Pitch 5
Pliers 15
Punches 18
Ratchet 11
Recall 4
Screwdrivers 13
Snips 18
Socket 10
Socket adapter 13
Spontaneous combustion 27
SST 22
Stud 5
Tensile strength 6
Trouble light 22
TSB 4
UNC 5
UNF 5
Universal joint 11
VECI 3
VIN 2
Washers 8
Wrenches 9

1

LEARNING OBJECTIVES AND KEY TERMS appear at the beginning of each chapter to help students and instructors focus on the most important material in each chapter. The chapter objectives are based on specific ASE and NATEF tasks.

TECH TIP

It Just Takes a Second

Whenever removing any automotive component, it is wise to screw the bolts back into the holes a couple of threads by hand. This ensures that the right bolt will be used in its original location when the component or part is put back on the vehicle.

TECH TIPS feature real world advice and "tricks of the trade" from ASE-certified master technicians.

SAFETY TIP

Shop Cloth Disposal

Always dispose of oily shop cloths in an enclosed container to prevent a fire. ● **SEE FIGURE 1–69.** Whenever oily cloths are thrown together on the floor or workbench, a chemical reaction can occur, which can ignite the cloth even without an open flame. This process of ignition without an open flame is called **spontaneous combustion.**

SAFETY TIPS alert students to possible hazards on the job and how to avoid them.

CASE STUDY

Lightning Damage

A radio failed to work in a vehicle that was outside during a thunderstorm. The technician checked the fuses and verified that power was reaching the radio. Both the radio and the antenna were replaced to correct the problem. ● **SEE FIGURE 28–26.**

Summary:

- **Complaint**—Customer stated that the radio did not work.
- **Cause**—Visual inspection showed an antenna that had been stuck by lightning.
- **Correction**—Replacing the radio and the antenna restored proper operation.

CASE STUDY present students with actual automotive scenarios and show how these common (and sometimes uncommon) problems were diagnosed and repaired.

FREQUENTLY ASKED QUESTION

How Many Types of Screw Heads Are Used in Automotive Applications?

There are many, including Torx, hex (also called Allen), plus many others used in custom vans and motor homes. ● **SEE Figure 1–9.**

FREQUENTLY ASKED QUESTIONS are based on the author's own experience and provide answers to many of the most common questions asked by students and beginning service technicians.

NOTE: Claw hammer has a claw used to remove nails; therefore, it is not for automotive service.

NOTES provide students with additional technical information to give them a greater understanding of a specific task or procedure.

CAUTION: Do not use a screwdriver as a pry tool or chisel. Screwdrivers use hardened steel only at the tip and are not designed to be pounded on or used for prying because they could bend easily. Always use the proper tool for each application.

CAUTIONS alert students about potential damage to the vehicle that can occur during a specific task or service procedure.

WARNING

Do not use incandescent trouble lights around gasoline or other flammable liquids. The liquids can cause the bulb to break and the hot filament can ignite the flammable liquid, which can cause personal injury or even death.

WARNINGS alert students about potential dangers to themselves during a specific task or service procedure.

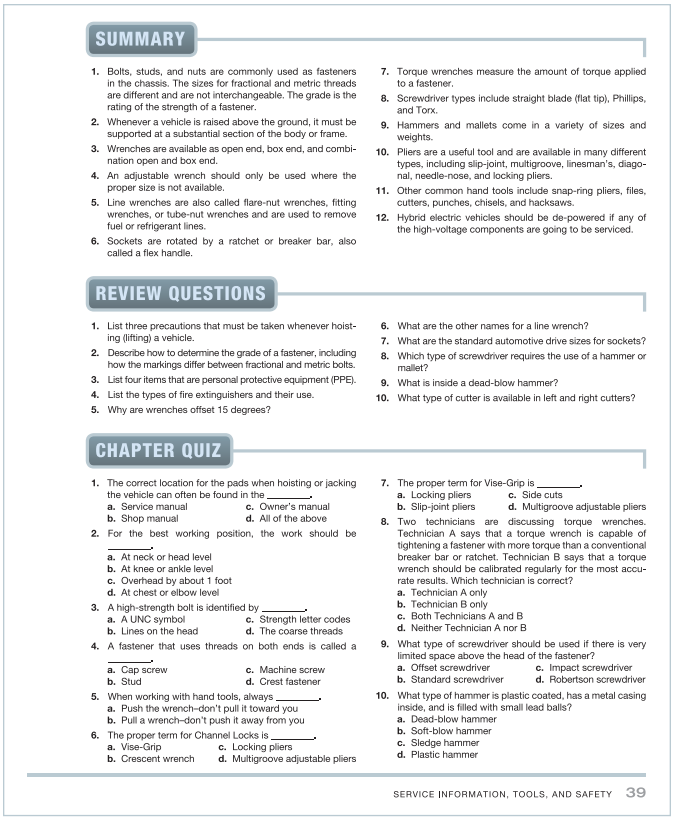

SUMMARY

1. Bolts, studs, and nuts are commonly used as fasteners in the chassis. The sizes for fractional and metric threads are different and are not interchangeable. The grade is the rating of the strength of a fastener.
2. Whenever a vehicle is raised above the ground, it must be supported at a substantial section of the body or frame.
3. Wrenches are available as open end, box end, and combination open and box end.
4. An adjustable wrench should only be used where the proper size is not available.
5. Line wrenches are also called flare-nut wrenches, fitting wrenches, or tube-nut wrenches and are used to remove fuel or refrigerant lines.
6. Sockets are rotated by a ratchet or breaker bar, also called a flex handle.
7. Torque wrenches measure the amount of torque applied to a fastener.
8. Screwdriver types include straight blade (flat tip), Phillips, and Torx.
9. Hammers and mallets come in a variety of sizes and weights.
10. Pliers are a useful tool and are available in many different types, including slip-joint, multigroove, linesman's, diagonal, needle-nose, and locking pliers.
11. Other common hand tools include snap-ring pliers, files, cutters, punches, chisels, and hacksaws.
12. Hybrid electric vehicles should be de-powered if any of the high-voltage components are going to be serviced.

REVIEW QUESTIONS

1. List three precautions that must be taken whenever hoisting (lifting) a vehicle.
2. Describe how to determine the grade of a fastener, including how the markings differ between fractional and metric bolts.
3. List four items that are personal protective equipment (PPE).
4. List the types of fire extinguishers and their use.
5. Why are wrenches offset 15 degrees?
6. What are the other names for a line wrench?
7. What are the standard automotive drive sizes for sockets?
8. Which type of screwdriver requires the use of a hammer or mallet?
9. What is inside a dead-blow hammer?
10. What type of cutter is available in left and right cutters?

CHAPTER QUIZ

1. The correct location for the pads when hoisting or jacking the vehicle can often be found in the _____.
   a. Service manual c. Owner's manual
   b. Shop manual d. All of the above
2. For the best working position, the work should be _____.
   a. At neck or head level
   b. At knee or ankle level
   c. Overhead by about 1 foot
   d. At chest or elbow level
3. A high-strength bolt is identified by _____.
   a. A UNC symbol c. Strength letter codes
   b. Lines on the head d. The coarse threads
4. A fastener that uses threads on both ends is called a _____.
   a. Cap screw c. Machine screw
   b. Stud d. Crest fastener
5. When working with hand tools, always _____.
   a. Push the wrench–don't pull it toward you
   b. Pull a wrench–don't push it away from you
6. The proper term for Channel Locks is _____.
   a. Vise-Grip c. Locking pliers
   b. Crescent wrench d. Multigroove adjustable pliers
7. The proper term for Vise-Grip is _____.
   a. Locking pliers c. Side cuts
   b. Slip-joint pliers d. Multigroove adjustable pliers
8. Two technicians are discussing torque wrenches. Technician A says that a torque wrench is capable of tightening a fastener with more torque than a conventional breaker bar or ratchet. Technician B says that a torque wrench should be calibrated regularly for the most accurate results. Which technician is correct?
   a. Technician A only
   b. Technician B only
   c. Both Technicians A and B
   d. Neither Technician A nor B
9. What type of screwdriver should be used if there is very limited space above the head of the fastener?
   a. Offset screwdriver c. Impact screwdriver
   b. Standard screwdriver d. Robertson screwdriver
10. What type of hammer is plastic coated, has a metal casing inside, and is filled with small lead balls?
   a. Dead-blow hammer
   b. Soft-blow hammer
   c. Sledge hammer
   d. Plastic hammer

SERVICE INFORMATION, TOOLS, AND SAFETY 39

THE SUMMARY, REVIEW QUESTIONS, AND CHAPTER QUIZ at the end of each chapter help students review the material presented in the chapter and test themselves to see how much they've learned.

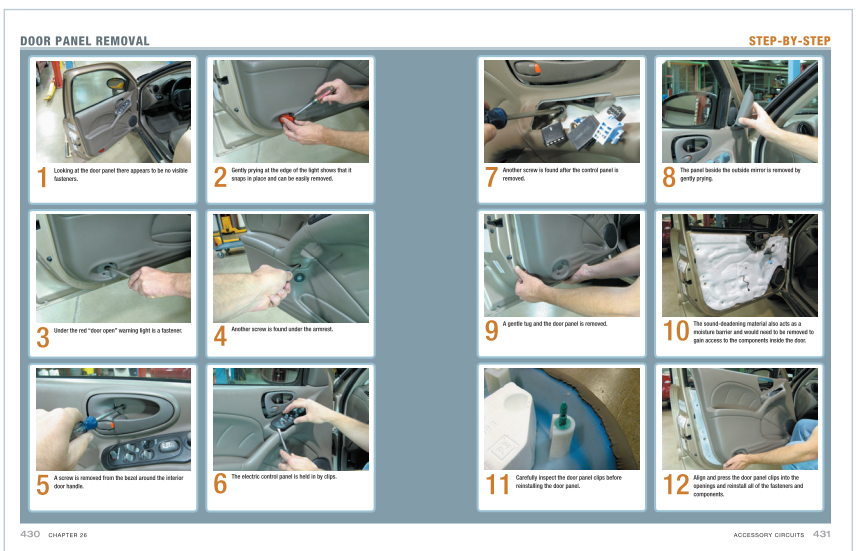

DOOR PANEL REMOVAL — STEP-BY-STEP

1 Looking at the door panel there appears to be no visible fasteners.

2 Gently prying at the edge of the light shows that it snaps in place and can be easily removed.

3 Under the red "door open" warning light is a fastener.

4 Another screw is found under the armrest.

5 A screw is removed from the bezel around the interior door handle.

6 The electric control panel is held in by clips.

7 Another screw is found after the control panel is removed.

8 The panel beside the outside mirror is removed by gently prying.

9 A gentle tug and the door panel is removed.

10 The sound-deadening material also acts as a moisture barrier and would need to be removed to gain access to the components inside the door.

11 Carefully inspect the door panel clips before reinstalling the door panel.

12 Align and press the door panel clips into the openings and reinstall all of the fasteners and components.

430 CHAPTER 26 — ACCESSORY CIRCUITS 431

STEP-BY-STEP photo sequences show in detail the steps involved in performing a specific task or service procedure.

SUPPLEMENTS

RESOURCES IN PRINT AND ONLINE
Automotive Electricity and Electronics

NAME OF SUPPLEMENT	PRINT	ONLINE	AUDIENCE	DESCRIPTION
Instructor Resource Manual 0134066774		✔	Instructors	NEW! The Ultimate teaching aid: Chapter summaries, key terms, chapter learning objectives, lecture resources, discuss/demonstrate classroom activities, and answers to the in-text review and quiz questions.
TestGen 0134074742		✔	Instructors	Test generation software and test bank for the text.
PowerPoint Presentation 013407484X		✔	Instructors	Slides include chapter learning objectives, lecture outline of the test, and graphics from the book.
Image Bank 0134074858		✔	Instructors	All of the images and graphs from the textbook to create customized lecture slides.
NATEF Correlated Task Sheets – for instructors 0134074718		✔	Instructors	Downloadable NATEF task sheets for easy customization and development of unique task sheets.
NATEF Correlated Task Sheets – for Students 0134074769	✔		Students	Study activity manual that correlates NATEF Automobile Standards to chapters and pages numbers in the text. Available to students at a discounted price when packaged with the text.
CourseSmart eText 0134074890		✔	Students	An alternative to purchasing the print textbook, students can subscribe to the same content online and save up to 50% off the suggested list price of the print text. Visit **www.coursesmart.com**

All online resources can be downloaded from the Instructor's Resource Center: **www.pearsonhighered.com/irc**

chapter 26

ACCESSORY CIRCUITS

LEARNING OBJECTIVES

After studying this chapter, the reader will be able to:

1. Explain the operation of different types of cruise control, precollision system, and how to troubleshoot cruise control.
2. Discuss how to test a heated rear window defogger circuit and rear window heating grids.
3. Describe how power windows and power seats operate.
4. Diagnose incorrect electric lock and keyless entry operation, and determine necessary action.
5. Explain how antitheft and immobilizer systems work, and diagnose faulty operation.

This chapter will help you prepare for the ASE Electrical/Electronic Systems (A6) certification test content area "H" (Accessories Diagnosis and Repair).

KEY TERMS

Adjustable pedals 413
Backlight 403
CHMSL 400
Control wires 408
Cruise control 398
Direction wires 408
Electric adjustable pedals (EAP) 413
ETC 400
HomeLink 405
Independent switches 406
Key fob 415
Lockout switch 406
Lumbar 409
Master control switch 406
Passive Antitheft System (PATS) 427
Passkey I and Passkey II 427
Passlock I and Passlock II 427
Peltier effect 412
Permanent magnet electric motors 406
Radio Frequency Identification (RFID) 425
Remote keyless entry (RKE) 425
Rubber coupling 409
Screw jack assembly 409
Sentry Key Immobilizer System (SKIS) 427
Transceiver 425
Transponder 425
Vehicle Antitheft System or (VATS) 427
Window regulator 406

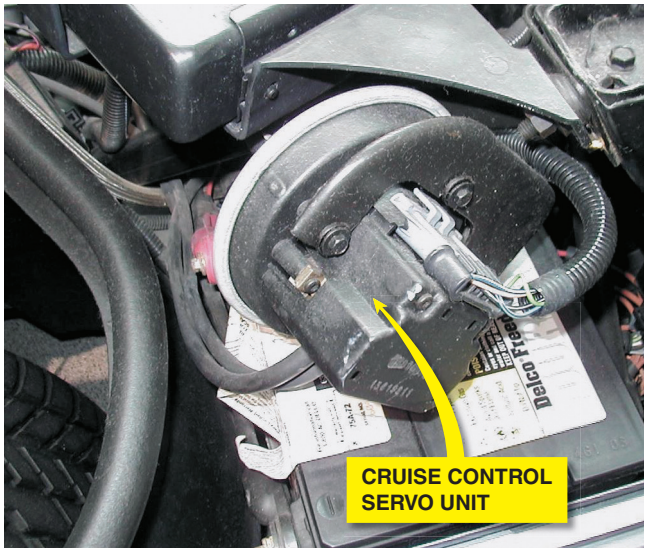

FIGURE 26–1 This cruise control servo unit has an electrical connection with wires that go to the cruise control module or the vehicle computer, depending on the vehicle. The vacuum hoses supply engine manifold vacuum to the rubber diaphragm that moves the throttle linkage to maintain the preset speed.

CRUISE CONTROL

PARTS INVOLVED **Cruise control** (also called *speed control*) is a combination of electrical and mechanical components designed to maintain a constant, set vehicle speed without driver pressure on the accelerator pedal. Major components of a typical cruise control system include the following:

1. **Servo unit.** The servo unit attaches to the throttle linkage through a cable or chain.

   The servo unit controls the movement of the throttle by receiving a controlled amount of vacuum from a control module. ● **SEE FIGURE 26–1**.

   Some systems use a stepper motor and do not use engine vacuum.

2. **Computer or cruise control module.** This unit receives inputs from the brake switch, throttle position (TP) sensor, and vehicle speed sensor. It operates the solenoids or stepper motor to maintain the set speed.

3. **Speed set control.** A speed set control is a switch or control located on the steering column, steering wheel, dash, or console. Many cruise control units feature coast, accelerate, and resume functions. ● **SEE FIGURE 26–2**.

4. **Safety release switches.** When the brake pedal is depressed, the cruise control system is disengaged through use of an electrical or vacuum switch, usually located on the brake pedal bracket. Both electrical and vacuum releases are used to be certain that the cruise control system is released, even in the event of failure of one of the release switches.

FIGURE 26–2 A cruise control used on a Toyota/Lexus.

WARNING

Most vehicle manufacturers warn in the owner manual that cruise control should not be used when it is raining or if the roads are slippery. Cruise control systems operate the throttle and if the drive wheels start to hydroplane, the vehicle slows, causing the cruise control unit to accelerate the engine. When the engine is accelerated and the drive wheels are on a slippery road surface, vehicle stability will be lost and might possibly cause a crash.

CRUISE CONTROL OPERATION A typical cruise control system can be set only if the vehicle speed is 30 mph or more. In a noncomputer–operated system, the transducer contains a low-speed electrical switch that closes when the speed-sensing section of the transducer senses a speed exceeding the minimum engagement speed.

NOTE: Toyota-built vehicles do not retain the set speed in memory if the vehicle speed drops below 25 mph (40 km/h). The driver is required to set the desired speed again. This is normal operation and not a fault with the cruise control system.

When the set button is depressed on the cruise control, solenoid valves on the servo unit allow engine vacuum to be applied to one side of the diaphragm, which is attached to the throttle plate of the engine through a cable or linkage. The servo unit usually contains two solenoids to control the opening and closing of the throttle.

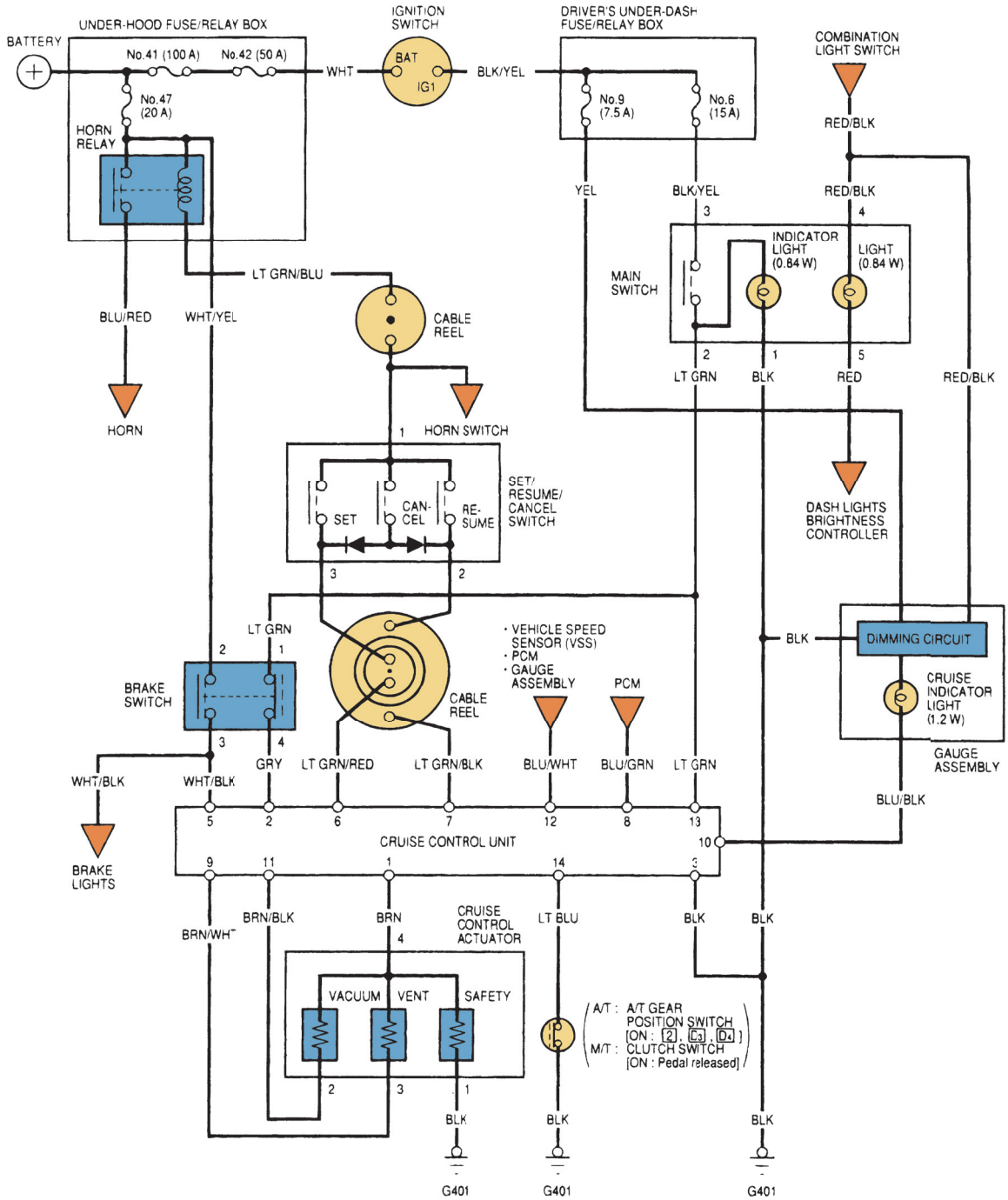

FIGURE 26–3 Circuit diagram of a typical electronic cruise control system.

- One solenoid opens and closes to control the passage, which allows engine vacuum to be applied to the diaphragm of the servo unit, increasing the throttle opening.
- One solenoid bleeds air back into the sensor chamber to reduce the throttle opening.

The throttle position sensor or a position sensor, inside the servo unit, sends the throttle position information to the cruise control module.

Most computer-controlled cruise control systems use the vehicle's speed sensor input to the engine control computer for speed reference. Computer-controlled cruise control systems also use servo units for throttle control, control switches for driver control of cruise control functions, and both electrical and vacuum brake pedal release switches. ● **SEE FIGURE 26–3**.

TECH TIP

Bump Problems

Cruise control problem diagnosis can involve a complex series of checks and tests. The troubleshooting procedures vary among manufacturers (and year), so a technician should always consult a service manual for the exact vehicle being serviced. However, every cruise control system uses a brake safety switch and, if the vehicle has manual transmission, a clutch safety switch. The purpose of these safety switches is to ensure that the cruise control system is disabled if the brakes or the clutch is applied. Some systems use redundant brake pedal safety switches, one electrical switch to cut off power to the system and the other a vacuum switch used to bleed vacuum from the actuating unit.

If the cruise control "cuts out" or disengages itself while traveling over bumpy roads, the most common cause is a misadjusted brake (and/or clutch) safety switch(es). Often, a simple readjustment of these safety switches will cure the intermittent cruise control disengagement problems.

CAUTION: Always follow the manufacturer's recommended safety switch adjustment procedures. If the brake safety switch(es) is misadjusted, it could keep pressure applied to the master brake cylinder, resulting in severe damage to the braking system.

TECH TIP

Check the Third Brake Light

On many General Motors vehicles, the cruise control will not work if the third brake light is out. This third brake light is called the **center high-mounted stop light (CHMSL)**. Always check the brake lights first if the cruise control does not work on a General Motors vehicle.

TROUBLESHOOTING CRUISE CONTROL

Cruise control system troubleshooting is usually performed using the step-by-step procedure as specified by the vehicle manufacturer.

The usual steps in the diagnosis of an inoperative or incorrectly operating mechanical-type cruise control include the following:

STEP 1 Use a factory or enhanced scan tool to retrieve any cruise control diagnostic trouble codes (DTCs). Perform bidirectional testing if possible using the scan tool.

STEP 2 Check that the cruise control fuse is not blown and that the cruise control dash light is on when the cruise control is turned on.

STEP 3 Check for proper operation of the brake and/or clutch switch.

STEP 4 Inspect the throttle cable and linkage between the sensor unit and the throttle plate for proper operation without binding or sticking.

STEP 5 Check the vacuum hoses for cracks or other faults.

STEP 6 Check that the vacuum servo unit (if equipped), using a hand–operated vacuum pump, can hold vacuum without leaking.

STEP 7 Check the servo solenoids for proper operation, including a resistance measurement check.

ELECTRONIC THROTTLE CRUISE CONTROL

PARTS AND OPERATION Many vehicles are equipped with an **electronic throttle control (ETC)** system. Vehicles equipped with such a system do not use throttle actuators for the cruise control. The ETC system operates the throttle under all engine operating conditions. An ETC system uses a DC electric motor to move the throttle plate that is spring loaded to a partially open position. The motor actually closes the throttle at idle against spring pressure. The spring-loaded position is the default position and results in a high idle speed. The powertrain control module (PCM) uses the input signals from the *accelerator pedal position* (APP) sensor to determine the desired throttle position. The PCM then commands the throttle to the necessary position of the throttle plate. ● **SEE FIGURE 26–4**.

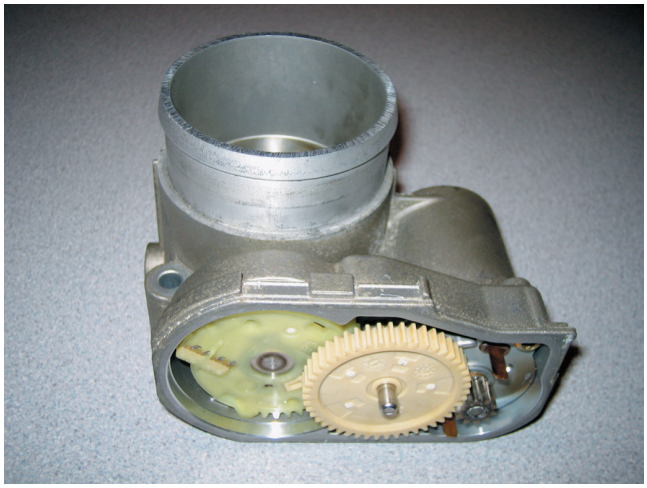

FIGURE 26–4 A typical electronic throttle with the protective covers removed.

FIGURE 26–5 A trailer icon lights on the dash of this Cadillac when the transmission trailer towing mode is selected.

TECH TIP

Use Trailer Tow Mode

Some customers complain that when using cruise control while driving in hilly or mountainous areas, the speed of the vehicle will sometimes go 5 to 8 mph below the set speed. The automatic transmission then downshifts, the engine speed increases, and the vehicle returns to the set speed. To help avoid the slowdown and rapid acceleration, ask the customer to select the trailer towing position. When this mode is selected, the automatic transmission downshifts almost as soon as the vehicle speed starts to decrease. This results in a smoother operation and is less noticeable to both the driver and passengers. ● **SEE FIGURE 26–5**.

The cruise control on a vehicle equipped with an electronic throttle control system consists of a switch to set the desired speed. The PCM receives the vehicle speed information from the vehicle speed (VS) sensor and uses the ETC system to maintain the set speed.

DIAGNOSIS AND SERVICE Any fault in the APP sensor or ETC system will disable the cruise control function. Always follow the specified troubleshooting procedures, which will usually include the use of a scan tool to properly diagnose the ETC system.

RADAR CRUISE CONTROL

PURPOSE AND FUNCTION The purpose of a radar cruise control system is to give the driver more control over the vehicle by keeping an assured clear distance behind the vehicle in front. If the vehicle in front slows, the radar cruise control detects the slowing vehicle and automatically reduces the speed of the vehicle to keep a safe distance. Then if the vehicle speeds up, the radar cruise control also allows the vehicle to increase to the preset speed. This makes driving in congested areas easier and less tiring.

TERMINOLOGY Depending on the manufacturer, radar cruise control is also referred to as the following:

- **Adaptive cruise control** (Audi, Ford, General Motors, and Hyundai)
- **Dynamic cruise control** (BMW, Toyota/Lexus)
- **Active cruise control** (Mini Cooper, BMW)
- **Autonomous cruise control** (Mercedes)

It uses forward-looking radar to sense the distance to the vehicle in front and maintains an assured clear distance. This type of cruise control system works within the following conditions.

1. Speeds from 20 to 100 mph (30 to 161 km/h)
2. Designed to detect objects as far away as 500 ft (150 m)

The cruise control system is able to sense both distance and relative speed. ● **SEE FIGURE 26–6**.

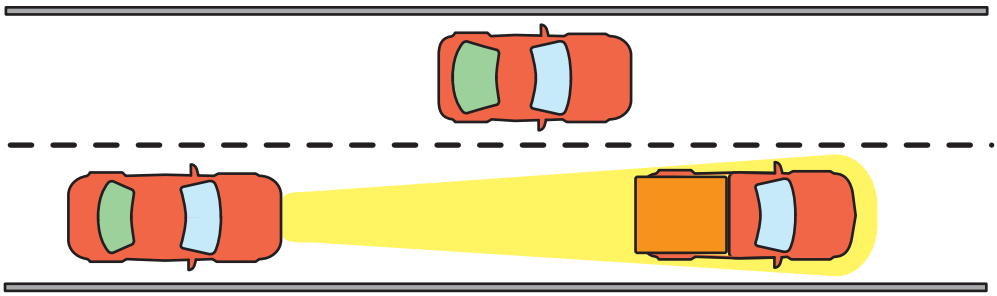

FIGURE 26–6 Radar cruise control uses sensors to keep the distance the same even when traffic slows ahead.

? FREQUENTLY ASKED QUESTION

Will Radar Cruise Control Set Off My Radar Detector?

It is doubtful. The radar used for radar cruise control systems operates on frequencies that are not detectable by police radar detector units. Cruise control radar works on the following frequencies.

- 76 to 77 GHz (long range)
- 24 GHz (short range)

The frequencies used for the various types of police radar include:

- X-band: 8 to 12 GHz
- K-band: 24 GHz
- Ka-band: 33 to 36 GHz

The only time there may be interference is when the radar cruise control, as part of a precollision system, starts to use short-range radar (SRR) in the 24 GHz frequency. This would trigger the radar detector but would be an unlikely event and just before a possible collision with a vehicle coming toward you.

PARTS AND OPERATION Radar cruise control systems use long-range radar (LRR) to detect faraway objects in front of the moving vehicle. Some systems use a short-range radar (SRR) and/or infrared (IR) or optical cameras to detect distances for when the distance between the moving vehicle and another vehicle in front is reduced. ● **SEE FIGURE 26–7**.

The radar frequencies include:

- 76 to 77 GHz (long-range radar)
- 24 GHz (short-range radar)

PRECOLLISION SYSTEM

PURPOSE AND FUNCTION The purpose and function of a precollision system is to monitor the road ahead and prepare to avoid a collision, and to protect the driver and passengers. A precollision system uses the following systems.

1. The long-range and short-range radar or detection systems used by a radar cruise control system to detect objects in front of the vehicle
2. Antilock brake system (ABS)
3. Adaptive (radar) cruise control
4. Brake assist system

TERMINOLOGY Precollision systems can be called by various names depending on the make of the vehicle. Some commonly used names for a precollision or precrash system include:

- **Ford/Lincoln:** Collision Warning with Brake Support
- **Honda/Acura:** Collision Mitigation Brake System (CMBS)
- **Mercedes-Benz:** Pre-Safe or Attention Assist
- **Toyota/Lexus:** Pre-Collision System (PCS) or Advanced Pre-Collision System (APCS)
- **General Motors:** Pre-Collision System (PCS)
- **Volvo:** Collision Warning with Brake Support or Collision Warning with Brake Assist

OPERATION The system functions by monitoring objects in front of the vehicle and can act to avoid a collision by the following actions.

- Sounds an alarm
- Flashes a warning lamp
- Applies the brakes and brings the vehicle to a full stop (if needed), if the driver does not react

● **SEE FIGURE 26–8**.

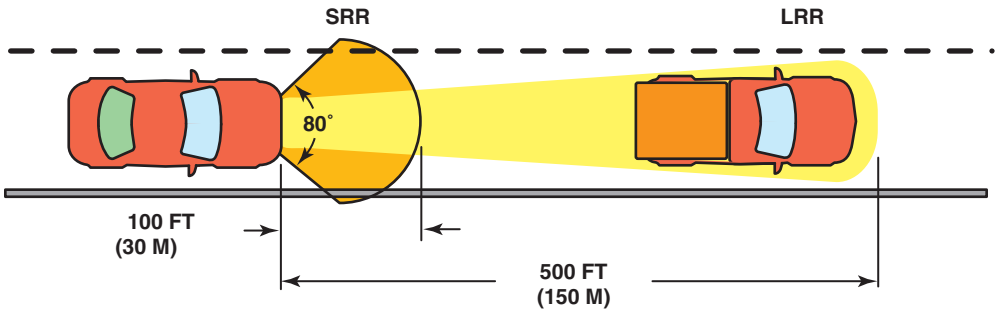

FIGURE 26–7 Most radar cruise control systems use radar, both long and short range. Some systems use optical or infrared cameras to detect objects.

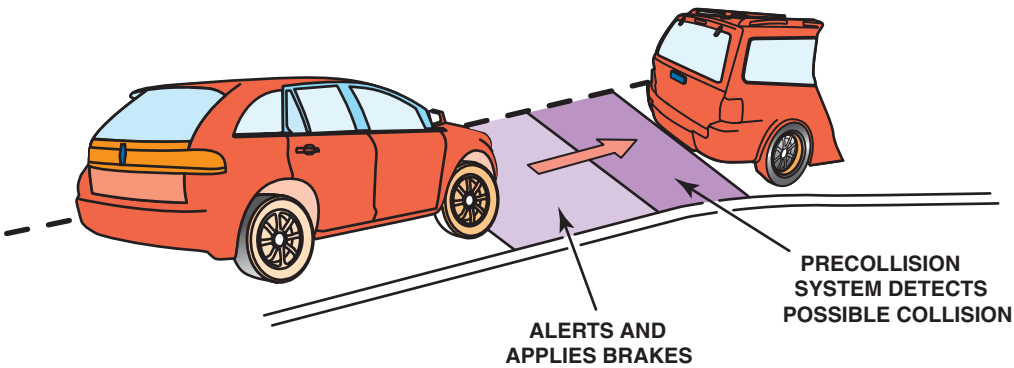

FIGURE 26–8 A precollision system is designed to prevent a collision first, and then interacts to prepare for a collision if needed.

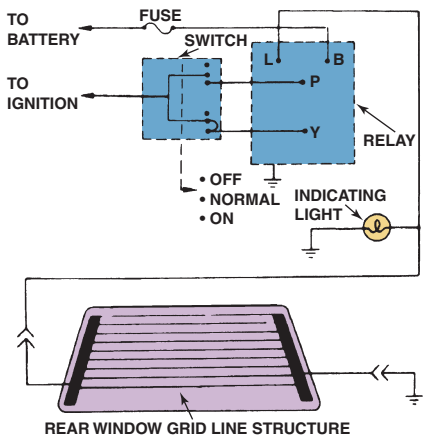

FIGURE 26–9 A switch and relay control current through the heating grid of a rear window defogger.

If the system is unable to prevent a collision, it will perform the following actions.

1. Apply the brakes in full force to reduce vehicle speed as much as possible
2. Close all windows and the sunroof to prevent the occupants from being ejected from the vehicle
3. Move the seats to an upright position
4. Raise the headrest (if electrically powered)
5. Pretension the seat belts
6. Airbags and seat belt tensioners function as designed during the collision

HEATED REAR WINDOW DEFOGGERS

PARTS AND OPERATION An electrically heated rear window defogger system uses an electrical grid baked on the glass that warms the glass to about 85°F (29°C) and clears it of fog or frost. The rear window is also called a **backlight**. The rear window defogger system is controlled by a driver-operated switch and a timer relay. ● **SEE FIGURE 26–9**.

The timer relay is necessary because the window grid can draw up to 30 amperes, and continued operation would put a strain on the battery and the charging system. Generally, the timer relay permits current to flow through the rear window grid for only 10 minutes. If the window is still not clear of fog after 10 minutes, the driver can turn the defogger on again, but after the first 10 minutes any additional defogger operation is limited to 5 minutes.

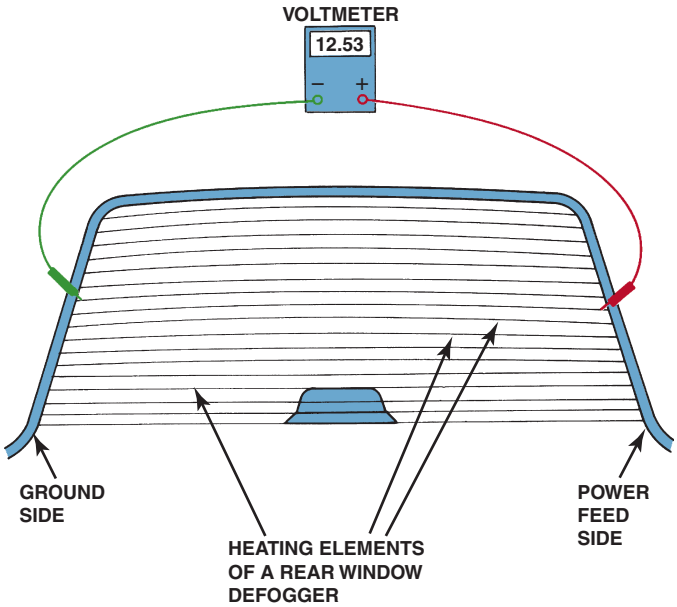

FIGURE 26–10 A rear window defogger electrical grid can be tested using a voltmeter to check for a decreasing voltage as the meter lead is moved from the power side toward the ground side. As the voltmeter positive lead is moved along the grid (on the inside of the vehicle), the voltmeter reading should steadily decrease as the meter approaches the ground side of the grid.

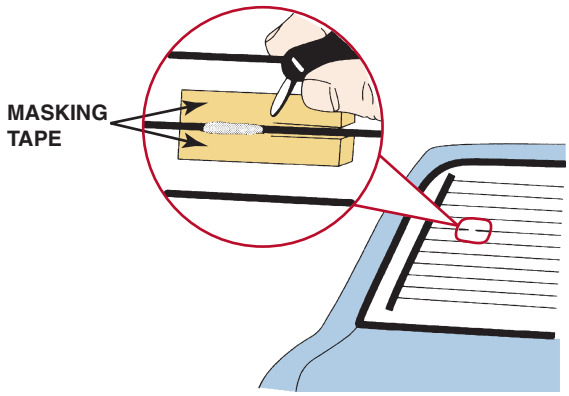

FIGURE 26–11 The typical repair material contains conductive silver-filled polymer, which dries in 10 minutes and is usable in 30 minutes.

PRECAUTION Electric grid-type rear window defoggers can be damaged easily by careless cleaning or scraping of the inside of the rear window glass. Short, broken sections of the rear window grid can be repaired using a special epoxy-based electrically conductive material. If more than one section is damaged or if the damaged grid length is greater than approximately 1.5 inches (3.8 cm), a replacement rear window glass may be required to restore proper defogger operation.

The electrical current through the grids depends, in part, on the temperature of the conductor grids. As the temperature decreases, the resistance of the grids decreases and the current flow increases, helping to warm the rear glass. As the temperature of the glass increases, the resistance of the conductor grids increases and the current flow decreases. Therefore, the defogger system tends to self-regulate the electrical current requirements to match the need for defogging.

NOTE: Some vehicles use the wire grid of the rear window defogger as the radio antenna. Therefore, if the grid is damaged, radio reception can also be affected.

HEATED REAR WINDOW DEFOGGER DIAGNOSIS

Troubleshooting a nonfunctioning rear window defogger unit involves using a test light or a voltmeter to check for voltage to the grid. If no voltage is present at the rear window, check for voltage at the switch and relay timer assembly. A poor ground connection on the opposite side of the grid from the power side can also cause the rear defogger not to operate. Because most defogger circuits use an indicator light switch and a relay timer, it is possible to have the indicator light on, even if the wires are disconnected at the rear window grid. A voltmeter can be used to test the operation of the rear window defogger grid. ● **SEE FIGURE 26–10**.

With the negative test terminal attached to a good body ground, carefully probe the grid conductors. There should be a decreasing voltage reading as the probe is moved from the power ("hot") side of the grid toward the ground side of the grid.

REPAIR OR REPLACEMENT If there is a broken grid wire, it can be repaired using an electrically conductive substance available in a repair kit.

Most vehicle manufacturers recommend that grid wire less than 2 inches (5 cm) long be repaired. If a bad section is longer than 2 inches, the entire rear window will need to be replaced. ● **SEE FIGURE 26–11**.

TECH TIP

The Breath Test

It is difficult to test for the proper operation of all grids of a rear window defogger unless the rear window happens to be covered with fog. A common trick that works is to turn on the rear defogger and exhale onto the outside of the rear window glass. In a manner similar to that of people cleaning eyeglasses with their breath, this procedure produces a temporary fog on the glass so that all sections of the rear grids can quickly be checked for proper operation.

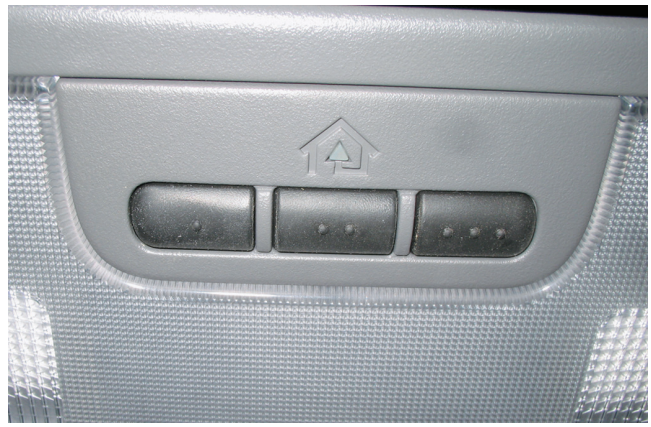

FIGURE 26–12 Typical HomeLink garage door opener buttons. Notice that three different units can be controlled from the vehicle using the HomeLink system.

HEATED MIRRORS

PURPOSE AND FUNCTION The purpose and function of heated outside mirrors is to heat the surface of the mirror, which evaporates moisture on the surface. The heat helps keep ice and fog off the mirrors to allow for better driver visibility.

PARTS AND OPERATION Heated outside mirrors are often tied into the same electrical circuit as the rear window defogger. Therefore, when the rear defogger is turned on, the heating grid on the backside of the mirror is also turned on. Some vehicles use a switch for each mirror.

DIAGNOSIS The first step in any diagnosis procedure is to verify the customer concern. Check the owner's manual or service information for the proper method to use to turn on the heated mirrors.

NOTE: Heated mirrors are not designed to melt snow or a thick layer of ice.

If a fault has been detected, check service information instructions for the exact procedure to follow. If the mirror itself is found to be defective, it is usually replaced as an assembly instead of being repaired.

HOMELINK GARAGE DOOR OPENER

OPERATION **HomeLink** is a device installed in many new vehicles that duplicates the radio-frequency code of the original garage door opener. The frequency range which HomeLink is able to operate is 288 to 418 MHz. The typical vehicle garage door opening system has three buttons that can be used to operate one or more of the following devices.

1. Garage doors equipped with a radio transmitter electric opener
2. Gates
3. Entry door locks
4. Lighting or small appliances

The devices include both fixed-frequency devices, usually older units, and rolling (encrypted) code devices. ● **SEE FIGURE 26–12**.

PROGRAMMING A VEHICLE GARAGE DOOR OPENER

When a vehicle is purchased, it must be programmed using the transmitter for the garage door opener or other device.

NOTE: The HomeLink garage door opening controller can only be programmed by using a transmitter. If an automatic garage door system does not have a remote transmitter, HomeLink cannot be programmed.

Normally, the customer is responsible for programming the HomeLink to the garage door opener. However, some customers may find that help is needed from the service

department. The steps that are usually involved in programming HomeLink in the vehicle to the garage door opener are as follows:

STEP 1 Unplug the garage door opener during programming to prevent it from being cycled on and off, which could damage the motor.

STEP 2 Check that the frequency of the handheld transmitter is between 288 and 418 MHz.

STEP 3 Install new batteries in the transmitter to be assured of a strong signal being transmitted to the HomeLink module in the vehicle.

STEP 4 Turn the ignition on, engine off (KOEO).

STEP 5 While holding the transmitter 4 to 6 inches away from the HomeLink button, press and hold the HomeLink button while pressing and releasing the handheld transmitter every two seconds. Continue pressing and releasing the transmitter until the indicator light near the HomeLink button changes from slow blink to a rapid flash.

STEP 6 Verify that the vehicle garage door system (HomeLink) button has been programmed. Press and hold the garage door button. If the indicator light blinks rapidly for two seconds and then comes on steady, the system has been successfully programmed using a rolling code design. If the indicator light is on steady, then it has been successfully programmed to a fixed-frequency device.

DIAGNOSIS AND SERVICE If a fault occurs with the HomeLink system, first verify that the garage door opener is functioning correctly. Also, check if the garage door opener remote control is capable of operating the door. Repair the garage door opener system as needed.

If the problem still exists, attempt reprogramming the HomeLink vehicle system, being sure that the remote has a newly purchased battery.

POWER WINDOWS

SWITCHES AND CONTROLS Power windows use electric motors to raise and lower door glass. They can be operated by both a **master control switch** located beside the driver and additional **independent switches** for each electric window. Some power window systems use a **lockout switch** located on the driver's controls to prevent operation of the power windows from the independent switches. Power windows are designed to operate only with the ignition switch in the on (run) position, although some manufacturers use a time delay for accessory power after the ignition switch is turned off. This feature permits the driver and passengers an opportunity to close all windows or operate other accessories for about 10 minutes or until a vehicle door is opened after the ignition has been turned off. This feature is often called *retained accessory power*.

POWER WINDOW MOTORS Most power window systems use **permanent magnet (PM) electric motors**. It is possible to run a PM motor in the reverse direction simply by reversing the polarity of the two wires going to the motor. Most power window motors do not require that the motor be grounded to the body (door) of the vehicle. The ground for all the power windows is most often centralized near the driver's master control switch. The up-and-down motion of the individual window motors is controlled by double-pole, double-throw (DPDT) switches. These DPDT switches have five contacts and permit battery voltage to be applied to the power window motor, as well as reverse the polarity and direction of the motor. Each motor is protected by an electronic circuit breaker. These circuit breakers are built into the motor assembly and are not a separate replaceable part. ● **SEE FIGURE 26–13**.

The power window motors rotate a mechanism called a **window regulator.** The window regulator is attached to the door glass and controls opening and closing of the glass. Door glass adjustments such as glass tilt and upper and lower stops are usually the same for both power and manual windows. ● **SEE FIGURE 26–14**.

AUTO DOWN/UP FEATURES Many power windows are equipped with an auto down feature that allows windows to be lowered all of the way if the control switch is moved to a detent or held down for longer than 0.3 second. The window will then move down all the way to the bottom, and then the motor stops.

Many vehicles are equipped with the auto up feature that allows the driver to raise the driver's side or all windows in some cases, with just one push of the button. A sensor in the window

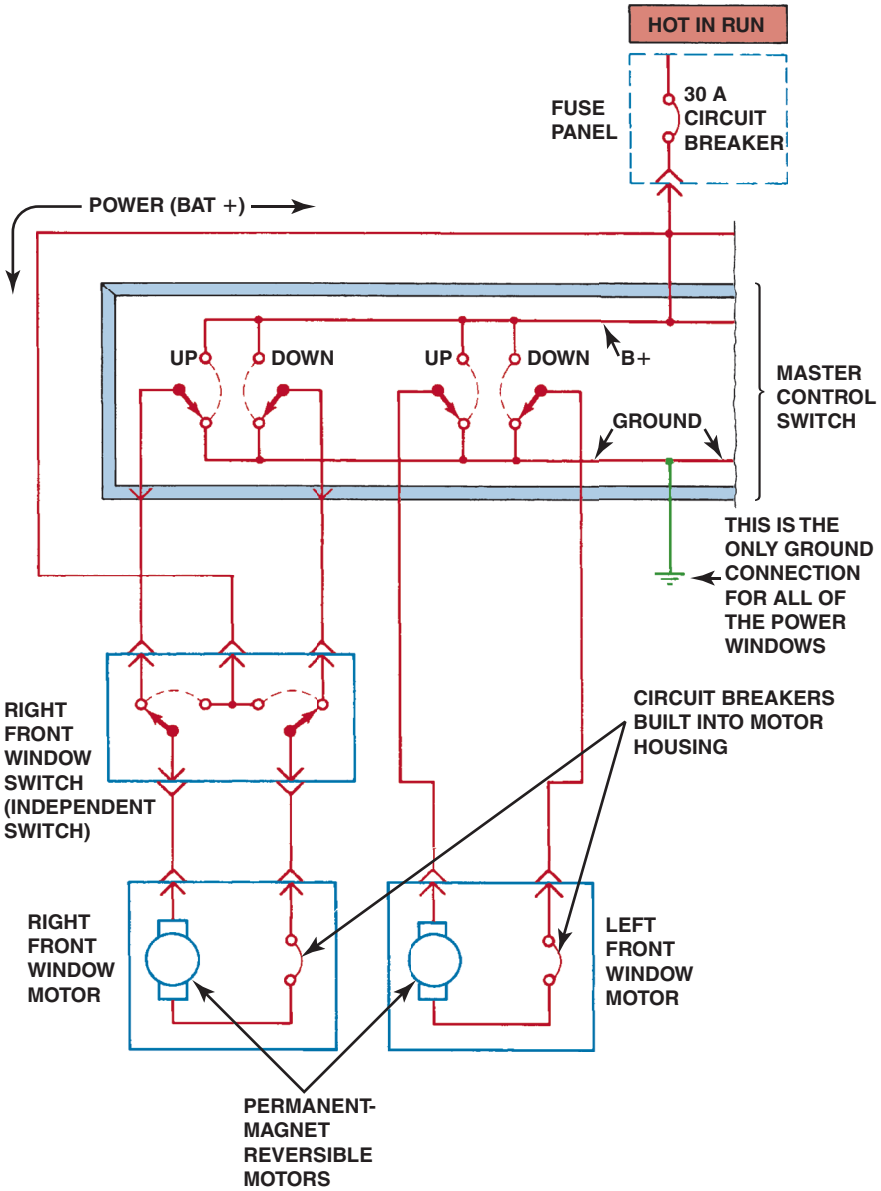

FIGURE 26–13 A typical power window circuit using PM motors. Control of the direction of window operation is achieved by directing the polarity of the current through the nongrounded motors. The only ground for the entire system is located at the master control (driver's side) switch assembly.

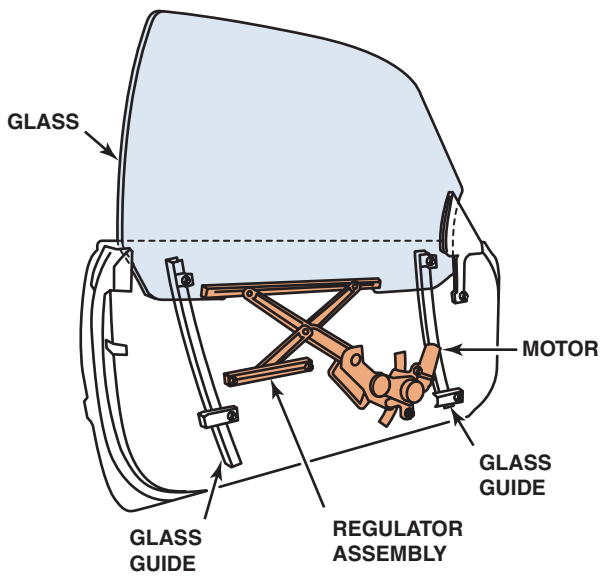

FIGURE 26–14 An electric motor and a regulator assembly raise and lower the glass on a power window.

motor circuit measures the current through the motor. The circuit is opened if the window touches an object, such as a hand or finger. When the window reaches the top or hits an object, the current through the window motor increases. When the upper limit amperage draw is reached, the motor circuit is opened and the window either stops or reverses. Most newer power windows use network communications modules to operate the power windows, and the switches are simply voltage signals to the module which supplies current to the individual window motors. ● **SEE FIGURE 26–15**.

TROUBLESHOOTING POWER WINDOWS Before troubleshooting a power window problem, check for proper operation of all power windows. Check service information for the

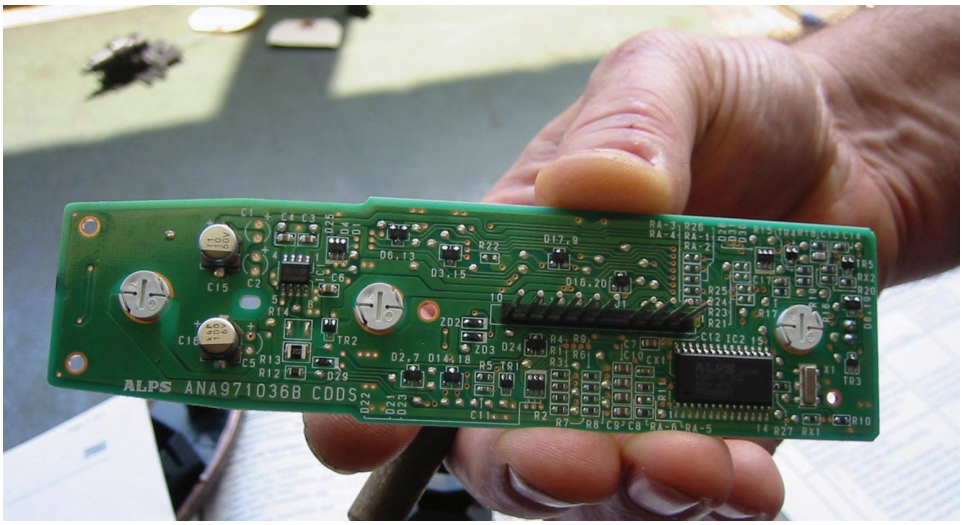

FIGURE 26–15 A master power window control panel with the buttons and the cover removed.

TECH TIP

Programming Auto Down Power Windows

Many vehicles are equipped with automatic operation that can cause the window to go all the way down (or up) if the switch is depressed beyond a certain point or held for a fraction of a second. Sometimes this feature is lost if the battery in the vehicle has been disconnected. Although this programming procedure can vary depending on the make and model, many times the window(s) can be reprogrammed without using a scan tool by simply depressing and holding the down button for 10 seconds. If the vehicle is equipped with an auto up feature, repeat the procedure by holding the button up for 10 seconds. Always check exact service information for the vehicle being serviced.

exact procedure to follow. In a newer system, a scan tool can be used to perform the following:

- Check for B (body) or U (network) diagnostic trouble codes (DTCs)
- Operate the power windows using the bidirectional control feature
- Relearn or program the operation of the power windows after a battery disconnect

For older systems, if one of the **control wires** that run from the independent switch to the master switch is cut (open), the power window may operate in only one direction. The window may go down but not up, or vice versa. However, if one of the **direction wires** that run from the independent switch to the motor is cut (open), the window will not operate in either direction. The direction wires and the motor must be electrically connected to permit operation and change of direction of the electric lift motor in the door.

1. If *both* rear door windows fail to operate from the independent switches, check the operation of the window lockout (if the vehicle is so equipped) and the master control switch.
2. If one window can move in one direction only, check for continuity in the control wires (wires between the independent control switch and the master control switch).
3. If *all* windows fail to work or fail to work occasionally, check, clean, and tighten the ground wire(s) located either behind the driver's interior door panel or under the dash on the driver's side. A defective fuse or circuit breaker could also cause all the windows to fail to operate.
4. If one window fails to operate in both directions, the problem could be a defective window lift motor. The window could be stuck in the track of the door, which could cause the circuit breaker built into the motor to open the circuit to protect the wiring, switches, and motor from damage. To check for a stuck door glass, attempt to move (even slightly) the door glass up and down, forward and back, and side to side. If the window glass can move slightly in all directions, the power window motor should be able to at least move the glass.
5. Always refer to and follow service information when diagnosing power window circuits.

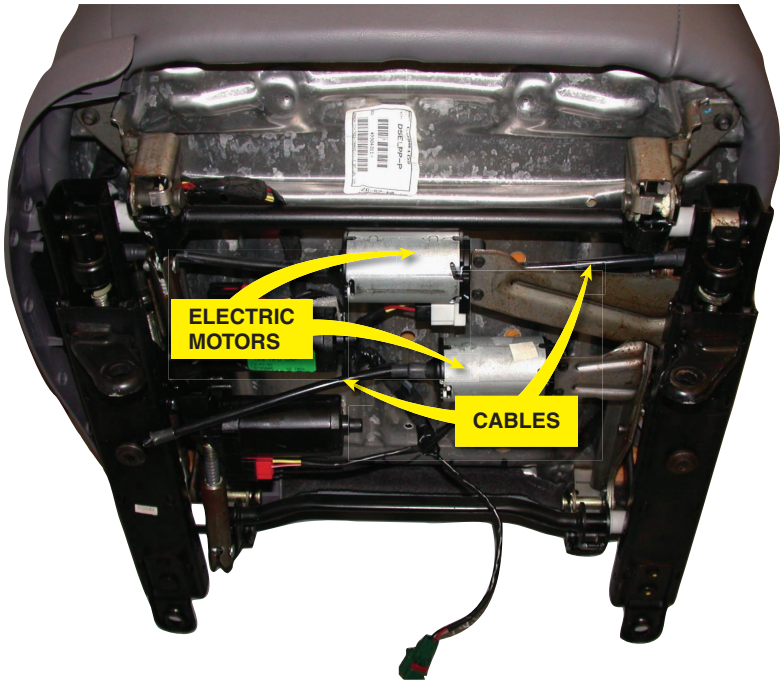

FIGURE 26–16 A power seat uses electric motors under the seat, which drive cables that extend to operate screw jacks (up and down) or gears to move the seat forward and back.

POWER SEATS

PARTS AND OPERATION A typical power-operated seat includes a reversible electric motor and a transmission assembly that may have three solenoids and six *drive cables* that turn the six seat adjusters. A six-way power seat offers seat movement forward and backward, plus seat cushion movement up and down at the front and the rear. The drive cables are similar to speedometer cables because they rotate inside a cable housing and connect the power output of the seat transmission to a gear or screw jack assembly that moves the seat. ● **SEE FIGURE 26–16**.

A **screw jack assembly** is often called a *gear nut.* It is used to move the front or back of the seat cushion up and down.

A **rubber coupling**, usually located between the electric motor and the transmission, prevents electric motor damage in the event of a jammed seat. This coupling is designed to prevent motor damage.

Most power seats use a permanent magnet motor that can be reversed by simply reversing the polarity of the current sent to the motor by the seat switch. ● **SEE FIGURE 26–17**.

POWER SEAT MOTOR(S) Most PM motors have a built-in circuit breaker or PTC circuit protector to protect the motor from overheating. Many Ford power seat motors use three separate armatures inside one large permanent magnet field housing. Some power seats use a series-wound electric motor with two separate field coils, one field coil for each direction of rotation. This type of power seat motor typically uses a relay to control the direction of current from the seat switch to the corresponding field coil of the seat motor. This type of power seat can be identified by the "click" heard when the seat switch is changed from up to down or front to back, or vice versa. The click is the sound of the relay switching the field coil current. Some power seats use as many as eight separate PM motors that operate all functions of the seat, including headrest height, seat length, and side bolsters, in addition to the usual six-way power seat functions.

NOTE: Some power seats use a small air pump to inflate a bag (or bags) in the lower part of the back of the seat, called the lumbar, because it supports the lumbar section of the spine. The lumbar section of the seat can also be changed, using a lever or knob that the driver can move to change the seat section for the lower back.

MEMORY SEAT Memory seats use a potentiometer to sense the position of the seat. The seat position can be programmed into the body control module (BCM) or memory seat module and stored by position number 1, 2, or 3. The driver pushes the desired button and the seat moves to the stored position. ● **SEE FIGURE 26–18** on page 411.

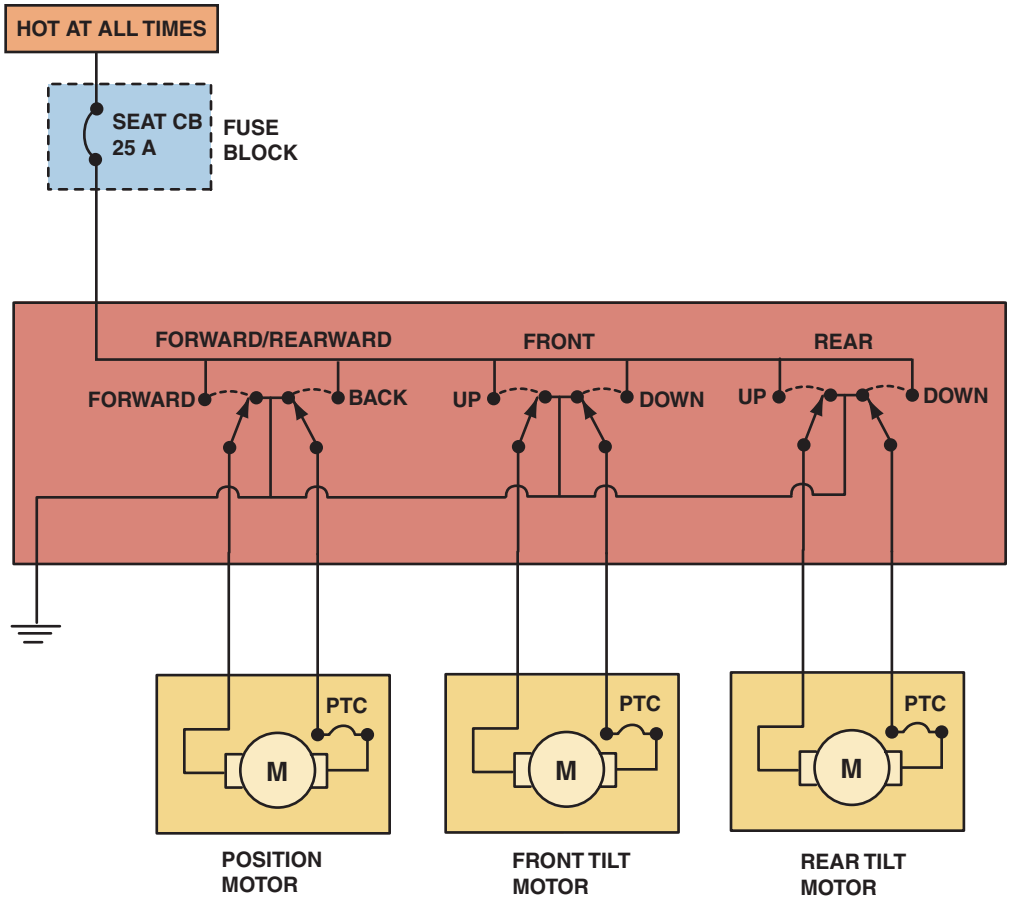

FIGURE 26–17 A typical power seat circuit diagram. Notice that each motor has a built-in electronic (solid-state) PTC circuit protector. The seat control switch can change the direction in which the motor(s) runs by reversing the direction in which the current flows through the motor.

On some vehicles, the memory seat position is also programmed into the remote keyless entry (RKE) key fob.

TROUBLESHOOTING POWER SEATS Power seats are usually wired from the fuse panel so they can be operated without having to turn the ignition switch to on (run). If a power seat does not operate or make any noise, the circuit breaker (or fuse, if the vehicle is so equipped) should be checked first. The steps usually include the following:

STEP 1 Check service information for the exact procedure to follow when diagnosing power seats. If the seat relay clicks, the circuit breaker is functioning, but the relay or electric motor may be defective.

STEP 2 Remove the screws or clips that retain the controls to the inner door panel or seat and check for voltage at the seat control.

STEP 3 Check the ground connection(s) at the transmission and clutch control solenoids (if equipped). The solenoids must be properly grounded to the vehicle body for the power seat circuit to operate.

TECH TIP

Easy Exit Seat Programming

Some vehicles are equipped with memory seats that allow the seat to move rearward when the ignition is turned off to allow easy exit from the vehicle. Vehicles equipped with this feature include an *exit/entry* button that is used to program the desired exit/entry position of the seat for each of two drivers.

If the vehicle is not equipped with this feature and only one driver primarily uses the vehicle, the second memory position can be programmed for easy exit and entry. Simply set position 1 to the desired seat position and position 2 to the entry/exit position. Then, when exiting the vehicle, press memory 2 to allow easy exit and easy entry the next time. Press memory 1 when in the vehicle to return the seat memory to the desired driving position.

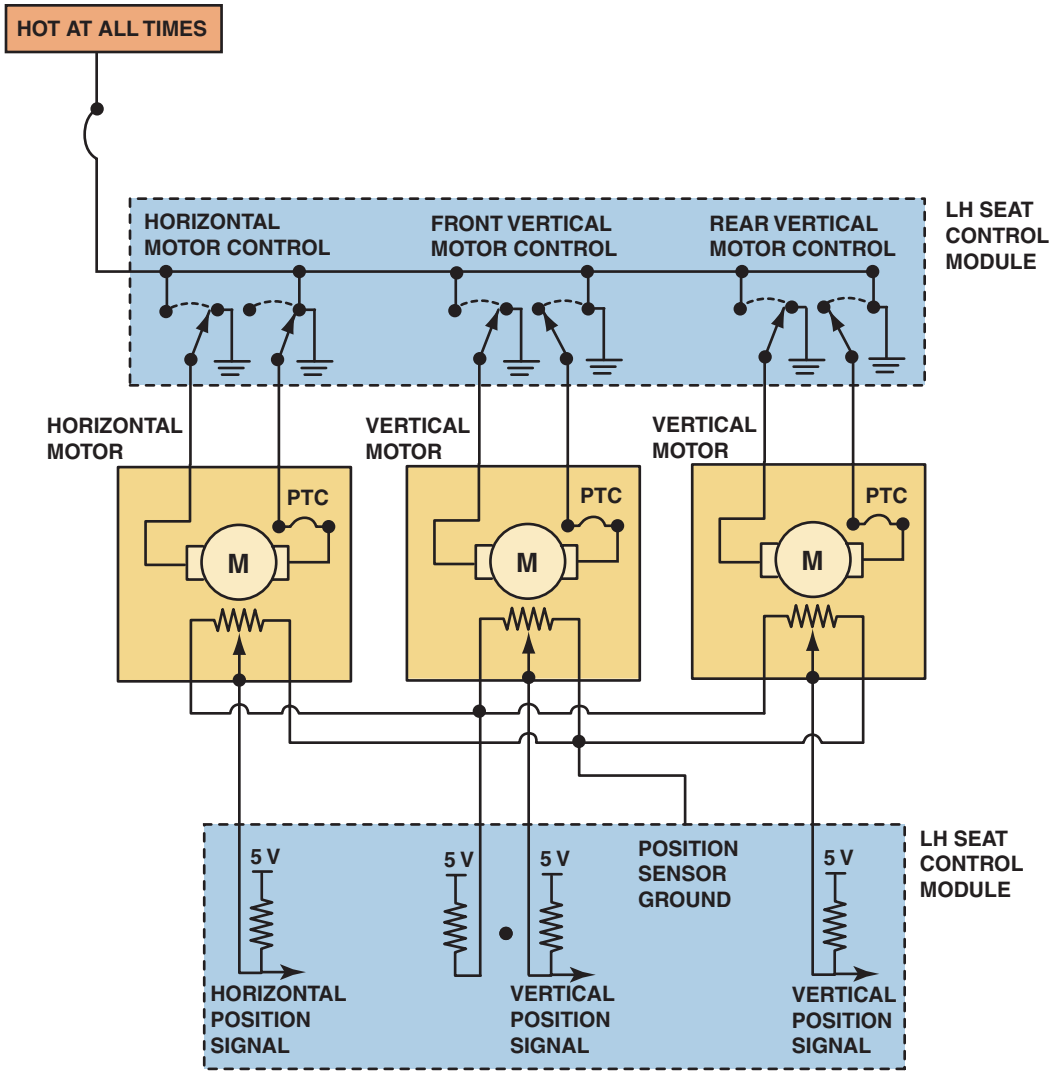

FIGURE 26–18 A typical memory seat module showing the three-wire potentiometer used to determine seat position.

If the power seat motor runs but does not move the seat, the most likely fault is a worn or defective rubber clutch sleeve between the electric seat motor and the transmission.

If the seat relay clicks but the seat motor does not operate, the problem is usually a defective seat motor or defective wiring between the motor and the relay. If the power seat uses a motor relay, the motor has a double reverse-wound field for reversing the motor direction. This type of electric motor must be properly grounded. Permanent magnet motors do not require grounding for operation.

NOTE: Power seats are often difficult to service because of restricted working room. If the entire seat cannot be removed from the vehicle because the track bolts are covered, attempt to remove the seat from the top of the power seat assembly. These bolts are almost always accessible regardless of seat position.

TECH TIP

What Every Driver Should Know About Power Seats

Power seats use an electric motor or motors to move the position of the seat. These electric motors turn small cables that operate mechanisms that move the seat. *Never* place rags, newspapers, or any other object under a power seat. Even ice scrapers can get caught between moving parts of the seat and can often cause serious damage or jamming of the power seat.

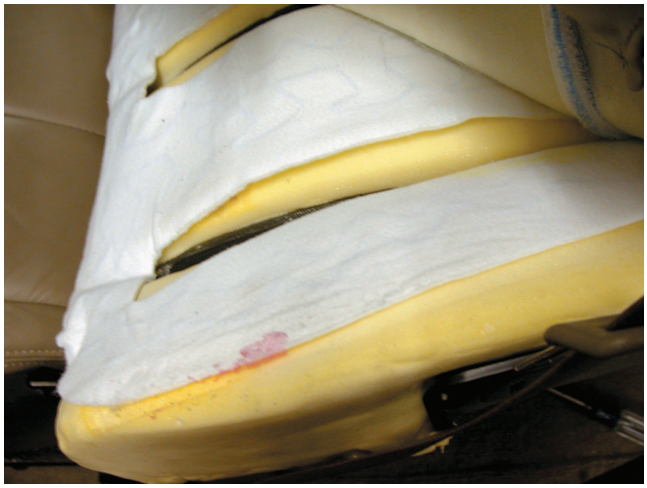

FIGURE 26–19 The heating element of a heated seat is a replaceable part, but service requires that the upholstery be removed. The yellow part is the seat foam material and the entire white cover is the replaceable heating element. This is then covered by the seat material.

ELECTRICALLY HEATED SEATS

PARTS AND OPERATION Heated seats use electric heating elements in the seat bottom, as well as in the seat back in many vehicles. The heating element is designed to warm the seat and/or back of the seat to about 100°F (37°C) or close to normal body temperature (98.6°F). Many heated seats also include a high-position or a variable temperature setting, so the temperature of the seats can therefore be as high as 110°F (44°C).

A temperature sensor in the seat cushion is used to regulate the temperature. The sensor is a variable resistor which changes with temperature and is used as an input signal to a heated seat control module. The heated seat module uses the seat temperature input, as well as the input from the high–low (or variable) temperature control, to turn the current on or off to the heating element in the seat. Some vehicles are equipped with heated seats in both the rear and the front seats.

DIAGNOSIS AND SERVICE When diagnosing a heated seat concern, start by verifying that the switch is in the on position and that the temperature of the seat is below normal body temperature. Using service information, check for power and ground at the control module and to the heating element in the seat. Most vehicle manufacturers recommend replacing the entire heating element if it is defective. ● **SEE FIGURE 26–19**.

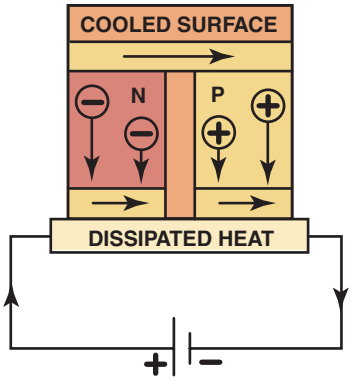

FIGURE 26–20 A Peltier effect device is capable of heating or cooling, depending on the polarity of the applied current.

HEATED AND COOLED SEATS

PARTS AND OPERATION Most electrically heated and cooled seats use a thermoelectric device (TED) located under the seat cushion and seat back. The thermoelectric device consists of positive and negative connections between two ceramic plates. Each ceramic plate has copper fins to allow the transfer of heat to air passing over the device and directed into the seat cushion. The thermoelectric device uses the **Peltier effect**, named after the inventor Jean C. A. Peltier, a French clockmaker. When electrical current flows through the module, one side is heated and the other side is cooled. Reversing the polarity of the current changes the side to be heated. ● **SEE FIGURE 26–20**.

Most vehicles equipped with heated and cooled seats use two modules per seat, one for the seat cushion and one for the seat back. When the heated and cooled seats are turned on, air is forced through a filter and then through the thermoelectric modules. The air is then directed through passages in the foam of the seat cushion and seat back. Each thermoelectric device has a temperature sensor called a thermistor. The control module uses sensors to determine the temperature of the fins in the thermoelectric device so the controller can maintain the set temperature.

DIAGNOSIS AND SERVICE The first step in any diagnosis is to verify that the heated–cooled seat system is not functioning. Check the owner's manual or service information for the specified procedures. If the system works partially, check the air filter, usually located under the seat for each thermoelectric device. A partially clogged filter can restrict airflow and reduce the heating or cooling effect. If the system control indicator light is not on or the system does not work at all, check for power and ground at the thermoelectric devices. Always follow the vehicle manufacturer's recommended diagnosis and service procedures.

TECH TIP

Check the Seat Filter

Heated and cooled seats often use a filter to trap dirt and debris to help keep the air passages clean. If a customer complains of a slow heating or cooling of the seat, check the air filter and replace or clean as necessary. Check service information for the exact location of the seat filter and for instructions on how to remove and/or replace it.

FIGURE 26–21 The heated steering wheel is controlled by a switch on the steering wheel in this vehicle.

HEATED STEERING WHEEL

PARTS INVOLVED A heated steering wheel usually consists of the following components.

- Steering wheel with a built-in heater in the rim
- Heated steering wheel control switch
- Heated steering wheel control module

OPERATION When the steering wheel heater control switch is turned on, a signal is sent to the control module and electrical current flows through the heating element in the rim of the steering wheel. ● **SEE FIGURE 26–21**.

The system remains on until the ignition switch is turned off or the driver turns off the control switch. The temperature of the steering wheel is usually calibrated to stay at about 90°F (32°C), and it requires three to four minutes to reach that temperature depending on the outside temperature.

DIAGNOSIS AND SERVICE Diagnosis of a heated steering wheel starts with verifying that the heated steering wheel is not working as designed.

NOTE: Most heated steering wheels do not work if the temperature inside the vehicle is about 90°F (32°C) or higher.

If the heated steering wheel is not working, follow the service information testing procedures, which would include a check of the following:

1. Check the heated steering wheel control switch for proper operation. This is usually done by checking for voltage at both terminals of the switch. If voltage is available at only one of the two terminals of the switch and the switch has been turned on and off, an open (defective) switch is indicated.
2. Check for voltage and ground at the terminals leading to the heating element. If voltage is available at the heating element and the ground has less than 0.2 volt drop to a good chassis ground, the heating element is defective. The entire steering wheel has to be replaced if the element is defective.

Always follow the vehicle manufacturer's recommended diagnosis and testing procedures.

ADJUSTABLE PEDALS

PURPOSE AND FUNCTION **Adjustable pedals**, also called **electric adjustable pedals (EAP)**, place the brake pedal and the accelerator pedal on movable brackets that are motor operated. A typical adjustable pedal system includes the following components.

- **Adjustable pedal position switch.** Allows the driver to position the pedals
- **Adjustable pedal assembly.** Includes the motor, threaded adjustment rods, and a pedal position sensor

● **SEE FIGURE 26–22**.

The position of the pedals, as well as the position of the seat system, is usually included as part of the memory seat function and can be set for two or more drivers.

DIAGNOSIS AND SERVICE The first step when there is a customer concern about the functioning of the adjustable pedals is to verify that the unit is not working as designed. Check the owner's manual or service information for the proper operation. Follow the vehicle manufacturer's recommended troubleshooting procedure. Many diagnostic procedures include the use of a factory scan tool with bidirectional control capabilities to test this system.

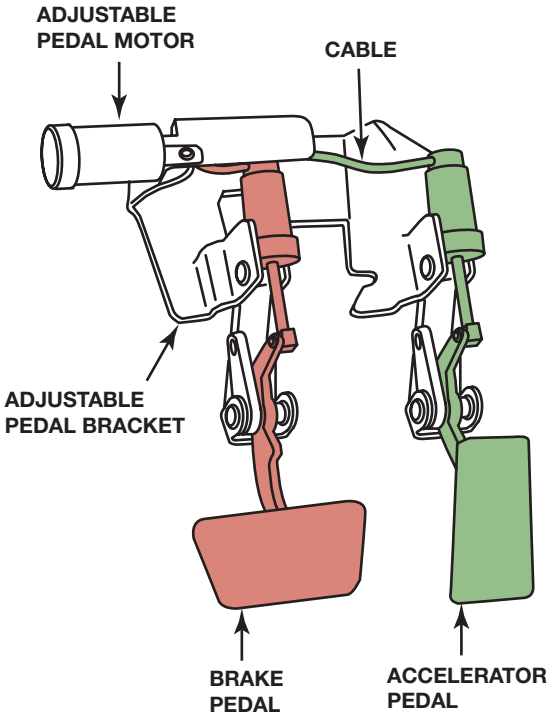

FIGURE 26–22 A typical adjustable pedal assembly. Both the accelerator and the brake pedal can be moved forward and rearward by using the adjustable pedal position switch.

TECH TIP

Check the Remote

The memory function may be programmed to a particular key fob remote, which would command the adjustable pedals to move to the position set in memory. Always check both remote settings before attempting to repair a problem that may not be a problem.

OUTSIDE FOLDING MIRRORS

Mirrors that can be electrically folded inward are a popular feature, especially on larger sport utility vehicles. A control inside is used to fold both mirrors inward when needed, such as when entering a garage or close parking spot. For diagnosis and servicing of outside folding mirrors, check service information for details.

FIGURE 26–23 Electrically folded mirror in the folded position.

FIGURE 26–24 The electric mirror control is located on the driver's side door panel on this Cadillac Escalade.

CASE STUDY

The Case of the Haunted Mirrors

The owner complained that while driving either one or the other outside mirror would fold in without any button being depressed. Unable to verify the customer concern, the service technician looked at the owner's manual to find out exactly how the mirrors were supposed to work. In the manual, a caution statement said that if the mirror is electrically folded inward and then manually pushed out, the mirror will not lock into position. The power folding mirrors must be electrically cycled outward, using the mirror switches to lock them in position. After cycling both mirrors inward and outward electrically, the problem was solved. ● **SEE FIGURES 26–23 AND 26–24**.

Summary:

- **Complaint**—Customer stated that the outside power folding mirror would fold by itself at times.
- **Cause**—The mirrors have to moved electrically and not manually to work correctly.
- **Correction**—Cycling the mirrors electrically restored proper operation.

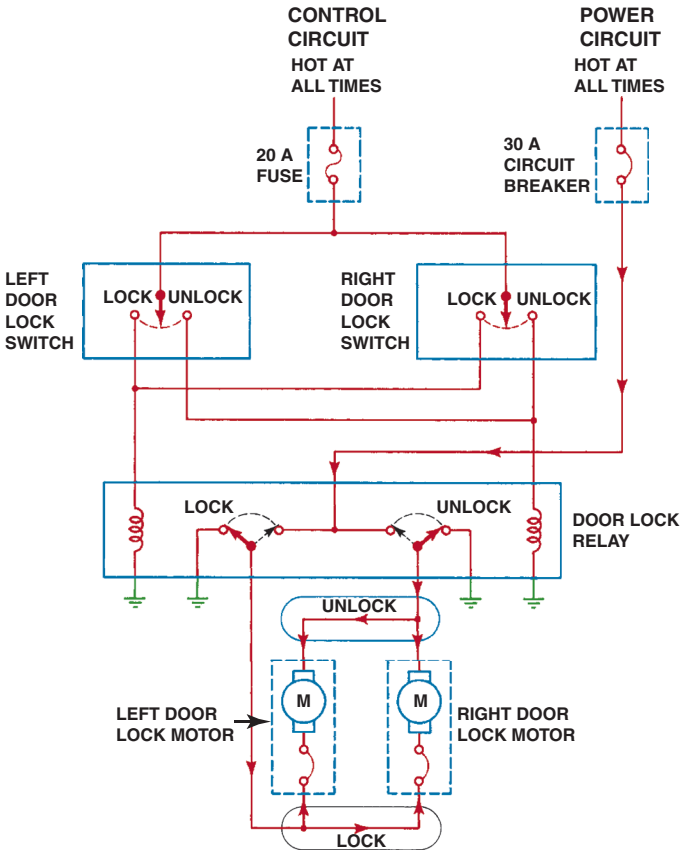

FIGURE 26–25 A typical electric power door lock circuit diagram. Note that the control circuit is protected by a fuse, whereas the power circuit is protected by a circuit breaker. As with the operation of power windows, power door locks typically use reversible permanent magnet (PM) nongrounded electric motors. These motors are geared mechanically to the lock–unlock mechanism.

ELECTRIC POWER DOOR LOCKS

Electric power door locks use a permanent magnet (PM) reversible motor to lock or unlock all vehicle door locks from a control switch or switches.

The electric motor uses a built-in circuit breaker and operates the lock-activating rod. PM reversible motors do not require grounding because, as with power windows, the motor control is determined by the polarity of the current through the two motor wires. ● **SEE FIGURE 26–25**.

Some two-door vehicles do *not* use a power door lock relay because the current flow for only two PM motors can be handled through the door lock switches. However, most four-door vehicles and vans with power locks on rear and side doors use a relay to control the current flow necessary to operate four or more power door lock motors. The door lock relay is controlled by the door lock switch and is commonly the location of the one and only *ground* connection for the entire door lock circuit.

FIGURE 26–26 A key fob remote.

KEYLESS ENTRY

Even though some Ford vehicles use a keypad located on the outside of the door, most keyless entry systems use a wireless transmitter built into the key or key fob. A **key fob** is a decorative tab or item on a key chain. ● **SEE FIGURE 26–26**.

The transmitter broadcasts a signal that is received by the electronic control module, which is generally mounted in the trunk or under the instrument panel. ● **SEE FIGURE 26–27**.

The electronic control unit sends a voltage signal to the door lock actuator(s) located in the doors. Generally, if the transmitter unlock button is depressed once, only the driver's door is unlocked. If the unlock button is depressed twice, then all doors unlock.

ROLLING CODE RESET PROCEDURE Many keyless remote systems use a rolling code type of transmitter and receiver. In a conventional system, the transmitter emits a certain fixed frequency, which is received by the vehicle control module. This single frequency can be intercepted and rebroadcast to open the vehicle.

A rolling code type of transmitter emits a different frequency every time the transmitter button is depressed and then rolls over to another frequency so that it cannot be intercepted. Both the transmitter and the receiver must be kept in synchronized order so that the remote will function correctly.

If the transmitter is depressed when it is out of range from the vehicle, the proper frequency may not be recognized by the receiver, which did not roll over to the new frequency when the transmitter was depressed. If the transmitter does not work, try to resynchronize the transmitter to the receiver by depressing and holding both the lock and the unlock button for 10 seconds when within range of the receiver.

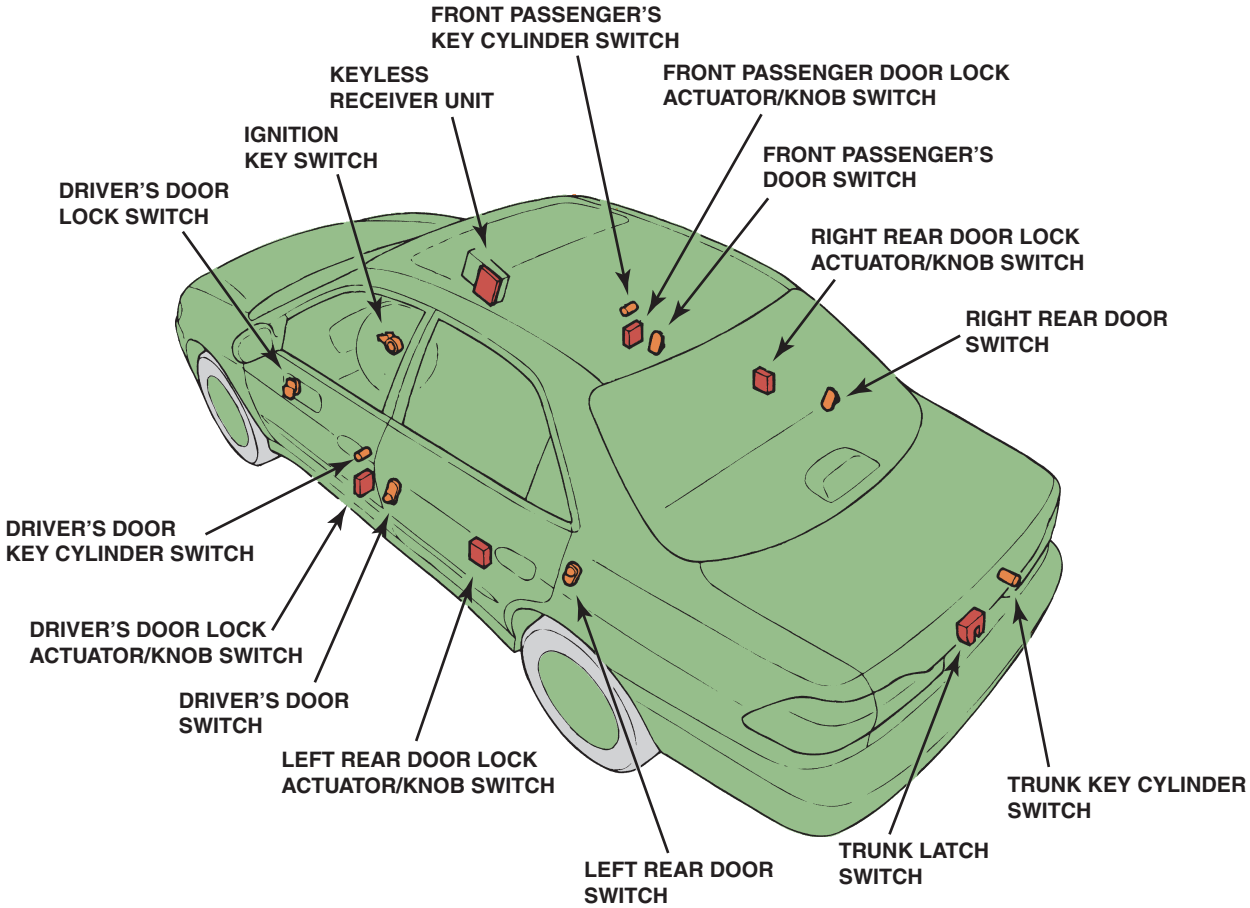

FIGURE 26–27 A typical vehicle showing the location of the various components of the remote keyless entry system.

KEYLESS ENTRY DIAGNOSIS A small battery powers the transmitter, and a weak battery is a common cause of remote power locks failing to operate. If the keyless entry system fails to operate after the transmitter battery has been replaced, check the following items.

- Mechanical binding in the door lock
- Low vehicle battery voltage
- Blown fuse
- Open circuit to the control module
- Defective control module
- Defective transmitter

PROGRAMMING A NEW REMOTE If a new or additional remote transmitter is to be used, it must be programmed to the vehicle. The programming procedure varies and may require the use of a scan tool. Check service information for the exact procedure to follow. ● **SEE CHART 26–1**.

MAKE/MODEL	NOTES	PROCEDURE
Acura RSX MDX 3.2TL RSX **Honda** Accord Civic CR-V Odyssey	Be careful to maintain the time limits between steps. Ensure that the hood, tailgate, and doors are closed. Aim the transmitter at the receiver in the power window master switch. The keyless receiver can store up to three codes. If a fourth code is stored, the first code that was input will be erased.	1. Turn the ignition on. 2. Within 1 to 4 seconds, press the lock or unlock button. 3. Within 1 to 4 seconds, turn the ignition off. 4. Repeat steps 1 through 3 two more times. 5. Within 1 to 4 seconds, turn the ignition on (fourth time). 6. Within 1 to 4 seconds, press the lock or unlock button. 7. The door lock actuators should cycle. 8. Press the lock or unlock button a second time within 1 to 4 seconds to store the code. 9. For additional transmitters, repeat steps 6, 7, and 8. 10. Turn the ignition off and remove the key to exit programming mode.
BMW All models with transmitter in key head	Up to four transmitters can be programmed. All transmitters to be used must be programmed at the same time. This procedure erases all learned transmitters.	1. Use the vehicle key to unlock the central locking system. 2. Enter the vehicle and close all doors. 3. Put the key in the ignition and switch the ignition switch to position 1 and then back to off within 5 seconds. 4. Press and hold key button 2 (arrow button). 5. While holding button 2, press button 1 (BMW logo) three times within 10 seconds. 6. Release button 2. 7. The locks will cycle to confirm programming. 8. Repeat steps 4 through 7 within 30 seconds for any additional transmitters. 9. After 30 seconds with no button pressed the programming mode will exit.
Buick Rendezvous Lucerne LaCrosse **Chevrolet** Blazer Impala Monte Carlo Uplander **Pontiac** Grand Prix Montana **Saturn** Relay	A scan tool is required. A total of four transmitters can be learned. All transmitters to be used must be programmed at the same time. Activating program mode erases previously learned codes.	1. Install a scan tool and access the BCM Special Functions, Lift Gate Module (LGM), or Module Setup; select Program Key Fobs menu. 2. Press the start key on the scan tool. 3. Press and hold both the lock and unlock buttons on the first transmitter. Within 5 to 10 seconds, the scan tool will report that the transmitter is programmed. 4. Repeat step 3 to program up to four transmitters. 5. Turn off and remove the scan tool to exit programming mode.
Buick Rainier **Cadillac** Escalade **Chevrolet** C/K Trucks Suburban Tahoe Trailblazer **Saab** 9–7 (some)	Fobs can also be programmed with a scan tool. All fobs to be used must be programmed at the same time. The first fob learned will be fob 1 and the second that is learned will be fob 2.	1. Enter the vehicle and close all the doors. 2. Insert the key into the ignition lock. 3. Press and hold the door unlock switch, then turn the ignition on, off, then release the unlock switch. 4. The door locks will cycle one time to confirm programming mode. 5. Press and hold the lock and unlock buttons on the key fob for about 15 seconds. 6. The locks will cycle once when the fob has been learned. 7. Repeat steps 5 and 6 to program any additional fobs. 8. Turn the ignition key to run to exit the programming mode.

CHART 26–1

(CONTINUED)

Remote keyless programming steps for popular vehicles. Procedures may also apply to similar vehicles by the same manufacturer. Always refer to service information for specific vehicles.

MAKE/MODEL	NOTES	PROCEDURE
Cadillac CTS SRX	All programmed key fobs will be erased. All transmitters to be programmed must be relearned during this procedure. Up to four fobs can be programmed. The first to be learned will be fob 1 and the second to be learned will be fob 2.	1. Install the scan tool and turn the ignition on. 2. Navigate to the Body, RFA (or RCDLR), Special Functions; Program Key Fobs menu. 3. Follow the directions on the scan tool to program the transmitters.
Cadillac Deville Seville **Pontiac** Bonneville Grand Am	Up to four transmitters can be programmed. All fobs to be used must be programmed at the same time. The first fob learned will be fob 1 and the second that is learned will be fob 2.	1. Install a scan tool and turn on the ignition. 2. Navigate to the Remote Function Actuator (RFA) module, Special Functions; Program Key Fobs menu to activate program mode. 3. The doors will lock and unlock to indicate programming mode. 4. Press and hold the lock and unlock buttons on the fob. The door locks will cycle to indicate the fob has been learned. 5. Repeat step 4 for any additional fobs. 6. To exit programming mode, turn off and remove the scan tool.
Cadillac STS XLR **Chevrolet** Corvette	A scan tool can also be used to program key fobs. This procedure will take 30 minutes to complete. All programmed key fobs will be erased. All transmitters to be programmed must be relearned during this procedure. Up to four fobs can be programmed. The first to be learned will be fob 1 and the second to be learned will be fob 2.	1. Start with the vehicle off. 2. Place the fob to be learned in the console pocket with the buttons facing forward. 3. Insert the vehicle key into the driver's door lock cylinder and cycle the key five times within 5 seconds. The DIC will display "OFF/ACC TO LEARN." 4. Press the OFF/ACC part of the ignition button. 5. The DIC will display "WAIT 10 MINUTES," then count down to zero, 1 minute at a time. The display will change to "OFF/ACC TO LEARN." 6. Repeat steps 4 and 5 two more times for a total of 30 minutes. 7. When the DIC displays "OFF/ACC TO LEARN" for the fourth time, press the OFF/ACC button again; the DIC will display "READY FOR FOB 1." 8. When fob 1 has been learned, a beep will be heard and the DIC will display "READY FOR FOB 2." 9. Remove fob 1 from the pocket and insert fob 2. A beep will be heard when that fob has been learned. 10. Repeat steps 8 and 9 for additional fobs. 11. To exit programming, press the OFF/ACC portion of the ignition button.
Chevrolet Cavalier Equinox Malibu SSR S/T Trucks **Saab** 9–7 (some models) **Saturn** Vue	A scan tool is required. Up to four transmitters can be programmed. On vehicles with personalization features, the transmitters are numbered 1 and 2. The first transmitter programmed will become driver 1 and the second will become driver 2.	1. Install the scan tool and navigate to the BCM or RFA menu, Special Functions; select Program Key Fobs. 2. Select Add/Replace Key Fob to program a new or additional fob. 3. Select Clear Memory and Program All Fobs option to replace all fobs or to recode driver 1 and driver 2 fobs. 4. Follow the scan tool instructions to complete the programming.
Chevrolet Venture van GM "U" vans	All fobs to be used must be programmed at the same time. Up to four transmitters can be programmed.	1. With the ignition key out of the ignition, remove the BCM PRGRM fuse from the passenger side fuse block. 2. Enter the vehicle and close all doors.

CHART 26–1

Remote keyless programming steps for popular vehicles. Procedures may also apply to similar vehicles by the same manufacturer. Always refer to service information for specific vehicles.

MAKE/MODEL	NOTES	PROCEDURE
	If the BCM displays DTCs in step 5, they may have to be resolved before programming can continue.	3. Insert the key and turn the ignition to ACC. 4. The seat belt indicator and chime will activate two, three, or four times, depending on the type of BCM in the vehicle. 5. Turn the key off and then back to ACC within 1 second. If the BCM has any stored DTCs, they will be displayed by the chime and belt indicator at this time. 6. Open and close any door. The chime will sound to indicate programming mode. 7. Press and hold the fob lock and unlock buttons for about 14 seconds. The BCM will sound the chime when the fob has been learned. 8. Repeat step 7 for up to four total transmitters. 9. After programming, remove the ignition key and replace the BCM PRGRM fuse.
Chrysler PT Cruiser Concorde	A scan tool is required if there are no functioning transmitters. Maximum of four transmitters can be programmed. Programming mode will exit after 30 seconds.	1. Turn ignition to run and wait until the chimes stop or fasten seat belt to cancel chimes. 2. Using any original working transmitter, press and hold the unlock button for 4 to 10 seconds. 3. While holding the unlock button, press the panic button for 1 second. Chime will sound to indicate programming mode is ready. 4. Press and release any button on the transmitters to be programmed. All transmitters should be programmed at this time, including previously programmed transmitters. A chime will sound after each programming success. 5. Turn the ignition off to exit programming.
Chrysler Sebring Town and Country **Dodge** Pickup R1500 Stratus R/T Caravan Dakota Durango **Jeep** Liberty	Programming is done by a scan tool or by "customer learn" mode. If no functioning transmitter is available, the scan tool must be used. Programming mode will cancel 60 seconds after the chimes stop in step 3. All programming must be completed within this time period. Up to four transmitters can be stored.	CUSTOMER LEARN MODE 1. Turn ignition to run and wait until the chimes stop or fasten seat belt to cancel chimes. 2. Using any original working transmitter, press and hold the unlock button for 4 to 10 seconds. 3. While holding the unlock button, press the panic button for 1 second. Chime will sound for 3 seconds to indicate programming mode is ready. 4. Press lock and unlock buttons together for 1 second and release. 5. Press and release any button on the same transmitter. If the code is successfully learned, the chime will sound. 6. To program additional transmitters, repeat steps 4 and 5. 7. Turn ignition off.
Ford Focus	Maximum of four transmitters can be programmed. All transmitters must be programmed at the same time. Programming mode will exit if: • The engine is started. • The 10 second time expires. • Four transmitters are programmed.	1. Enter vehicle. Close all doors. 2. Turn ignition switch from ACC to run, four times within 6 seconds. 3. Turn ignition switch to off. 4. Chime will sound to indicate ready to program. 5. Within 10 seconds, press any button on the transmitter. A chime will indicate code accepted. 6. To program additional transmitters, repeat step 5.

CHART 26–1 ***(CONTINUED)***

Continued

MAKE/MODEL	NOTES	PROCEDURE
Ford F150 Pickup Explorer Taurus Escape Expedition Excursion Ranger **Lincoln** Navigator **Mazda** B2300 **Mercury** Mountaineer Mariner	All transmitters must be programmed at the same time. RKE transmitters can also be programmed using a scan tool. Programming mode will exit if: • The key is turned off. • The 20 second time expires. • The maximum number of transmitters are programmed (depends on vehicle).	1. Electrically unlock the doors using the RKE transmitter of door lock switch. 2. Turn the key from off to run, eight times within 10 seconds, ending with the key on. The module will lock and unlock the doors, indicating program mode. 3. Within 20 seconds, press any button on the transmitter. The locks will cycle to indicate the transmitter has been learned. 4. Repeat step 3 for any additional RKE transmitters. 5. Turn the key off to exit the programming mode.
Infiniti G20 G35 FX35 Q45	Key fob codes can be checked and changed using a scan tool. If step 2 is done too fast, the system will not enter programming mode. Up to five key fobs can be registered. If more than five are input, the oldest ID code will be overwritten. It is possible to enter the same key code into all five memories. This can be used to erase the ID code of a fob that has been lost, if needed.	1. Enter the vehicle and close all doors. 2. Insert and then completely remove key from the ignition cylinder more than six times within 10 seconds. Hazard warning lamps will flash twice to indicate programming mode is active. 3. Insert the key and turn the ignition to ACC. 4. Press any key on the fob once. The hazard warning lamps will flash twice to indicate that the code is stored. 5. To end programming mode open the driver's door. If programming additional fobs proceed to step 6 (don't open the driver's door). 6. To enter an additional code, unlock and then lock the driver's door using the window main switch. 7. Press any button on the additional fob. The hazard warning lamps will flash twice to indicate the code is learned. 8. To enter another key fob code, repeat steps 6 and 7. 9. Open the driver's door to end programming mode.
Lincoln Town Car Continental Navigator **Mercury** Grand Marquis	All RKE transmitters must be programmed at the same time. RKE transmitters can also be programmed using a scan tool. Additional transmitters must be programmed within 7 seconds or the process will have to be repeated from step 1. Wait at least 20 seconds after exiting programming mode to test the RKE transmitters.	1. Turn the key from off to run, eight times (four times for early systems) within 10 seconds, ending with the key on. The module will lock and unlock the doors, indicating program mode. 2. Press any button on the transmitter. Doors will lock and unlock to confirm programming success. 3. To program additional code, repeat step 2 within 7 seconds. 4. Wait 7 seconds or turn the key off to exit programming mode.

CHART 26–1

Remote keyless programming steps for popular vehicles. Procedures may also apply to similar vehicles by the same manufacturer. Always refer to service information for specific vehicles.

MAKE/MODEL	NOTES	PROCEDURE
Mazda 5 6	Start with the key out and all doors, trunk lid, and lift gate closed. A total of three transmitters can be programmed. Previously programmed transmitters may be erased during this procedure. If possible, program all desired transmitters at the same time.	1. Open the driver's side door. 2. Put the key in the ignition lock and turn the ignition to "on" and back to lock three times (ending in the lock position with the key in the ignition). 3. Close and then open the driver's door three times, ending with the door open. The door locks will lock and unlock. 4. Push the unlock button on the transmitter twice. Door locks will lock and unlock to verify programming is okay. 5. Repeat step 4 for any additional transmitter to be programmed. 6. When the last transmitter to be programmed has been learned, push the unlock button twice on that transmitter to exit programming mode.
Mazda 626 Millenia Protégé	Start with the key out and all doors, trunk lid, and lift gate closed. A total of three transmitters can be programmed. Previously programmed transmitters may be erased during this procedure. If possible, program all desired transmitters at the same time. Protégé will cycle locks instead of sounding a buzzer.	1. Open the driver's side door. 2. Put the key in the ignition lock and turn the ignition to "on" and back to lock, three times, then remove the key. 3. Close and then open the driver's door three times, ending with the door open. A buzzer will sound from the CPU. 4. Push any button on the transmitter twice. Buzzer will sound once to verify programming is okay. 5. Repeat step 4 for any additional transmitter to be programmed. 6. When the last transmitter to be programmed has been learned, push any button twice on that transmitter. The buzzer will sound twice to exit programming mode.
Nissan Altima Armada Frontier Maxima Murano Titan	Key fob codes can also be checked and changed using a scan tool. If step 2 is done too fast, the system will not enter programming mode. Up to five key fobs can be registered. If more than five are input, the oldest ID code will be overwritten. It is possible to enter the same key code into all five memories. This can be used to erase the ID code of a fob that has been lost, if needed.	1. Enter the vehicle and close all doors. 2. Insert and then completely remove key from the ignition cylinder more than six times within 10 seconds. Hazard warning lamps will flash twice to indicate programming mode is active. 3. Insert the key and turn the ignition to ACC. 4. Press any key on the fob once. The hazard warning lamps will flash twice to indicate that the code is stored. 5. To end programming mode, open the driver's door. If programming additional fobs, proceed to step 6 (don't open the driver's door). 6. To enter an additional code, unlock and then lock the driver's door using the window main switch. 7. Press any button on the additional fob. The hazard warning lamps will flash twice to indicate the code is learned. 8. To enter another key fob code, repeat steps 6 and 7. 9. Open the driver's door to end programming mode.
Pontiac Vibe **Scion** xB	Up to four transmitters can be programmed. If more than four transmitters are programmed, the oldest transmitter code will be overwritten.	1. Enter the vehicle, key out of ignition, close all doors except the driver's door. 2. Insert and remove the key from the ignition twice within 5 seconds. 3. Close and open the driver's door twice within 40 seconds and then insert the key and remove it.

CHART 26–1 **(*CONTINUED*)**

Continued

MAKE/MODEL	NOTES	PROCEDURE
Toyota Camry Corolla	There are four programming modes: • Add mode: Used to program additional transmitters • Rewrite mode: Erases all previously programmed transmitters • Confirmation mode: Indicates how many transmitters are already programmed • Prohibition mode: Erases all learned codes and disables the wireless entry system In confirmation mode, if no codes are stored the door locks will cycle five times. Open any door to exit the programming mode.	4. Close and open the driver's door twice again, then insert the ignition key and close the door. 5. Turn the key from lock to "on" and back to lock to select the programming mode: • One time for add mode (go to step 6) • Two times for rewrite mode (go to step 6) • Three times for confirmation mode (go to step 10) • Five times for prohibition mode (see step 11) 6. Remove the key from the ignition. 7. The doors will lock–unlock once for add mode or twice for rewrite mode. 8. To program a transmitter, press lock and unlock buttons for 1.5 seconds and release; then within 3 seconds press either button for more than 1 second to confirm programming: • One lock–unlock cycle indicates okay. • Two lock–unlock cycles indicates not okay; repeat this step. 9. Repeat step 8 to program additional transmitters. 10. In confirmation mode, the number of lock–unlock cycles will indicate the number of codes already stored and programming mode will exit. Example: Two cycles indicate two codes are stored. 11. If prohibition mode is selected, the locks will cycle five times and programming mode will exit.
Pontiac G6 **Saturn** Ion L300	A scan tool is used to program key fobs. Up to four transmitters can be programmed. If any key fob is programmed, all fobs must be programmed at the same time. On vehicles with personalization features, the transmitters are numbered 1 and 2. The first transmitter programmed will become driver 1 and the second will become driver 2.	1. Install the scan tool and navigate to the Program Key Fobs menu. 2. Select the number of fobs to be programmed. 3. Press and hold the lock and unlock buttons on the first fob to be programmed. The locks should cycle to indicate okay. NOTE: This fob becomes driver 1 key fob. 4. Repeat step 3 for the second fob. This fob becomes driver 2 key fob. 5. Repeat step 3 for any other key fobs to be programmed. 6. Turn off and remove the scan tool to exit programming.
Saab 9–2	Up to four transmitters can be programmed.	1. Sit in the driver's seat and close all doors. 2. Open and close the driver's door. 3. Turn the ignition switch from "on" to lock, 10 times within 15 seconds. The horn will chirp to indicate programming mode. 4. Open and close the driver's door. 5. Press any button on the fob to be programmed. 6. The horn will chirp two times to indicate that the transmitter has been learned. 7. Repeat steps 4, 5, and 6 for any additional transmitters. 8. To exit from programming mode, remove the key from the ignition. The horn should chirp three times to confirm.

CHART 26–1

Remote keyless programming steps for popular vehicles. Procedures may also apply to similar vehicles by the same manufacturer. Always refer to service information for specific vehicles.

MAKE/MODEL	NOTES	PROCEDURE
Subaru Forester Impreza Legacy Outback Tribeca	A scan tool is used to program RKE codes. Up to four RKE transmitters can be registered. The eight-digit code is on the plastic bag of a new transmitter on the circuit board inside the transmitter.	1. Install the scan tool and navigate to the keyless transmitter ID registration menu. 2. Input the transmitter eight-digit ID number into the scan tool. 3. When the number is correct, press yes. 4. The scan tool will display "ID registration done" when the ID is programmed. 5. Follow the scan tool menus to program additional transmitters.
Toyota Tundra Sequoia **Lexus** GS 430 RX 300	Up to four transmitters can be programmed. If more than four transmitters are programmed, the oldest transmitter code will be overwritten. There are four programming modes: • Add mode: Used to program additional transmitters • Rewrite mode: Erases all previously programmed transmitters • Confirmation mode: Indicates how many transmitters are already programmed • Prohibition mode: Erases all learned codes and disables the wireless entry system In confirmation mode, if no codes are stored the door locks will cycle five times. Open any door to exit the programming mode.	1. Enter the vehicle, key out of ignition, close all doors except the driver's door. 2. Insert and remove the key from the ignition key cylinder. 3. Use the driver's door lock control switch to lock and unlock the doors five times, at about 1 second intervals. 4. Close and open the driver's door. 5. Use the driver's door lock control switch to lock and unlock the doors five times, at about 1 second intervals. 6. Insert the ignition key. 7. Turn the key from lock to "on" and back to lock to select the programming mode: • One time for add mode (go to step 10) • Two times for rewrite mode (go to step 10) • Three times for confirmation mode (go to step 12) • Five times for prohibition mode (see step 13) 8. Remove the key from the ignition. 9. The doors will lock–unlock once, twice, three times, or five times to confirm the mode. 10. To program a transmitter, press lock and unlock buttons for 1.5 seconds and release; then within 3 seconds press either button for more than 1 second to confirm programming: • One lock–unlock cycle indicates okay. • Two lock–unlock cycles indicates not okay; repeat this step. 11. Repeat step 10 to program additional transmitters. 12. In confirmation mode, the number of lock–unlock cycles will indicate the number of codes already stored and programming mode will exit. Example: Two cycles indicate two codes are stored. 13. If prohibition mode is selected, the locks will cycle five times and programming mode will exit.

CHART 26–1

Continued

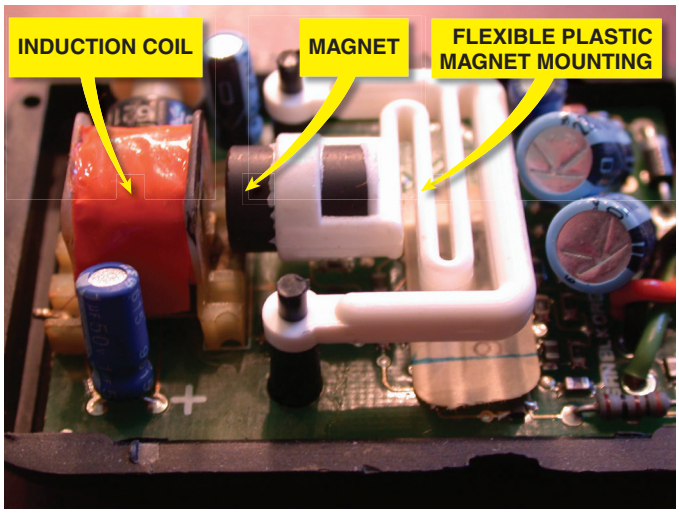

FIGURE 26–28 A shock sensor used in alarm and antitheft systems. If the vehicle is moved, the magnet will move relative to the coil, inducing a small voltage that will trigger the alarm.

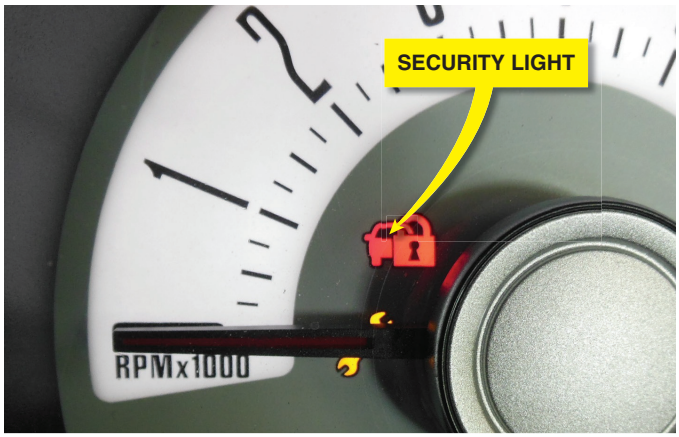

FIGURE 26–29 The security system symbol used on a Ford. The symbol varies by make, model, and year, so check service information to determine what symbol is used on the vehicle being diagnosed.

VEHICLE SECURITY SYSTEMS

PURPOSE AND FUNCTION The purpose and function of a security system on a vehicle is to prevent the unauthorized use (theft) of the vehicle. This function is accomplished by installing the following locks:

1. A lock on the doors to help prevent unauthorized entry to the interior of the vehicle.
2. A lock for the ignition so a key is needed to crank and start the engine and unlock the steering wheel, installed starting in 1970.

While these locks have worked, vehicles can still be easily stolen if access to the interior and the ignition switch is provided. It is the purpose and function of an immobilizer system to prevent the vehicle from being started if the correct ignition key is not used even if an intruder gets access to the interior of the vehicle and tries to use a key that fits the lock cylinder.

POSSIBLE IMMOBILIZER CAUSED FAULTS Faults with the immobilizer system can be the cause of one of the following conditions, depending on the exact make and model of a vehicle:

- No crank condition (the starter motor does not operate)
- The engine cranks but does not start (fuel disabled in most vehicles)
- The engine starts but then almost immediately stalls

Therefore, if a customer concern involves any of these situations, a fault in the immobilizer system is a possible cause rather than a fault with the ignition or fuel system.

? FREQUENTLY ASKED QUESTION

What Is Content Theft Protection?

Content theft protection is a security system that includes sensors that detect glass breakage or entry into the vehicle and sounds an alarm when these occur. The purpose of the content theft system is to prevent the theft of objects inside the vehicle and sound an alarm when someone enters the vehicle without using the proper remote or key. Most systems use a motion detector for content theft protection system as well as switches in the doorjambs, trunk, and hood provide an input signal to the control module. Some antitheft systems are more complex and also have electronic sensors that trigger the alarm if glass is broken or a change in battery current draw. These sensors also provide an input signal to the control module, which may be a separate antitheft unit or may be incorporated into the PCM or BCM. ● **SEE FIGURE 26–28**.

IMMOBILIZER SYSTEMS

NORMAL OPERATION A vehicle equipped with an immobilizer system operates normally as follows:

- When a valid key is used and is rotated to the start position, the engine cranks and starts and the immobilizer symbol on the dash will flash on and off for about two seconds, and then goes off. ● **SEE FIGURE 26–29**.
- If there is a fault with an invalid key, the dash symbol will flash continuously and the engine will not start or if it does crank and start, the engine will not continue to run.

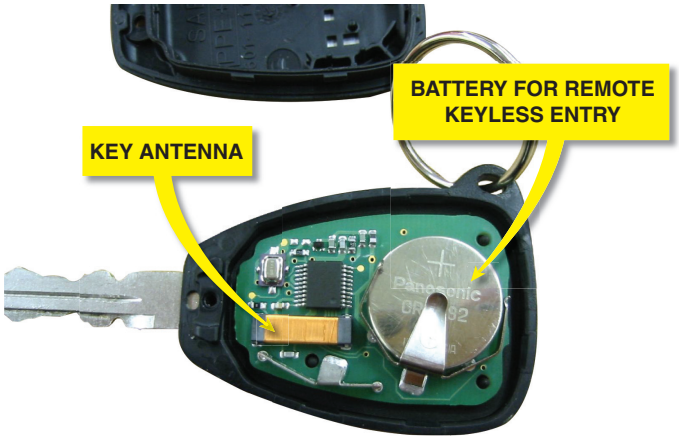

FIGURE 26–30 A typical key with the cover removed showing the battery used to power the door lock and the antenna used for the immobilizer system.

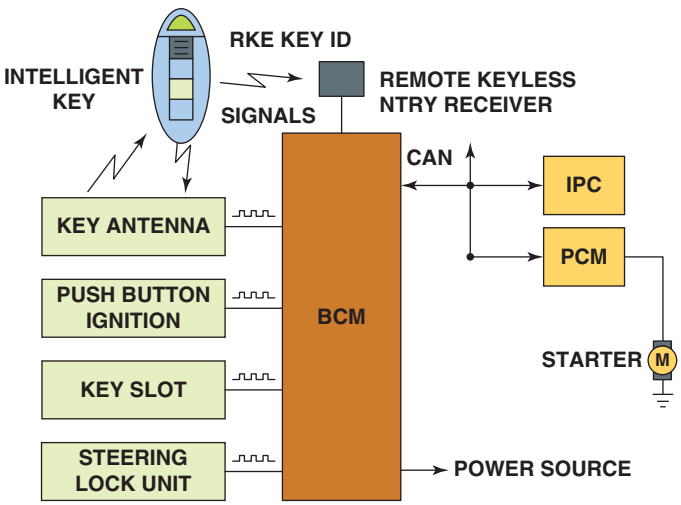

FIGURE 26–31 The remote keyless entry is used to unlock the doors, as well as create the signals to the powertrain control module (PCM) used to control the starter motor and/or the fuel system and the warning lamp on the instrument panel cluster (IPC).

IMMOBILIZER SYSTEM PARTS

Most security systems today use a **Radio Frequency Identification (RFID)** security system, which has two main components:

1. A **key fob** is the object that is a decoration on a key ring and usually contains a transmitter used to unlock a vehicle. While the **remote keyless entry (RKE)** part of the key fob has a battery to power the transmitter, the RFID chip part of the key fob does not require a battery to function. The **transponder** is mounted in the key or the body of the key fob. A transponder has an antenna, which consists of a coil of wire as well as a circuit board containing the processing electronics and data memory. ● **SEE FIGURE 26–30**.

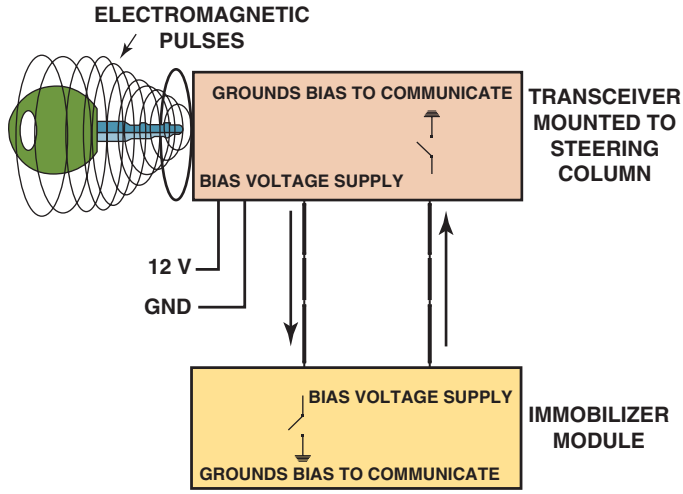

FIGURE 26–32 A typical immobilizer circuit showing the communication between the key and the transceiver. The transceiver then communicates with the immobilizer module over data lines.

2. The transponder key has the transponder electronics integrated in its plastic body. It consists of the following components:
   - A microchip contains the unique internal identification (ID) number. To prevent an unauthorized scanning of the ID number, the code changes with each transfer and uses several million different coding possibilities. ● **SEE FIGURE 26–31**.
   - The coil antenna in the key consists of a copper coil wound up in a ring case and an integrated circuit to create a high-frequency alternating voltage for the inductive coupling. Through inductive (electromagnetic) coupling, the data from the key is transferred to the immobilizer module.
   - Another coil is installed around the lock cylinder and connected to the control module of the immobilizer system. This coil transfers and receives all data signals to and from the immobilizer control module using the coil antenna/transceiver. It does not need to be reprogrammed to the immobilizer system in case of replacement.
   - A **transceiver** is inside the vehicle and receives the signal transmitted by the transponder in the key. A "transceiver" functions as both a reviewer and a transmitter. The transceiver is usually mounted on the steering column assembly. The antenna for the transceiver is a coil of wire mounted within the plastic ring that mounts around the lock cylinder. ● **SEE FIGURE 26–32**.

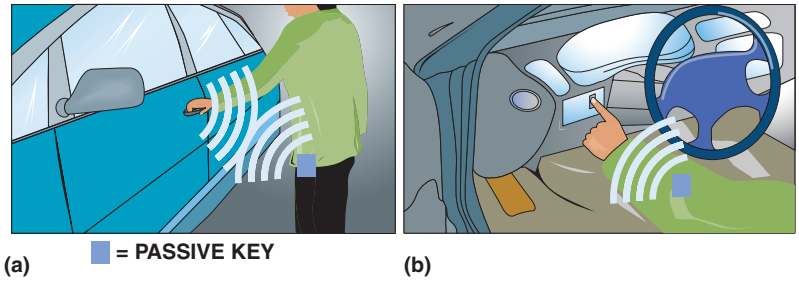

FIGURE 26–33 (a) If the passive key is within about 15 feet (5 meters) of the vehicle when the door handle is touched, the door will unlock allowing access to the interior (b) The engine will start if the smart key is detected being inside the vehicle.

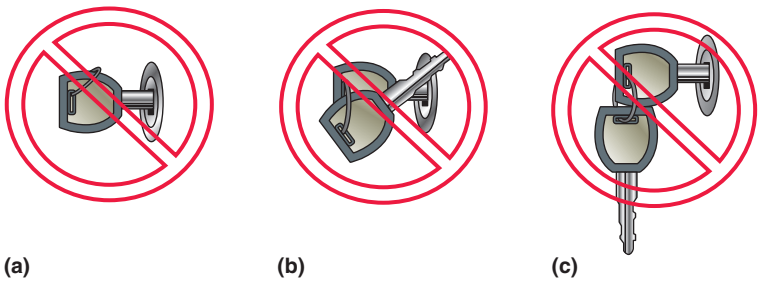

FIGURE 26–34 (a) Avoid using a key where the key ring is over the top of the key, which can interfere with the operation of the immobilizer system. (b) Do not angle another key upward from the key being used to help prevent interference with the magnetic field used to energize the key. (c) Do not have the keys from another vehicle near the key being used.

FREQUENTLY ASKED QUESTION

What Is a Passive Keyless Entry System?

A passive system uses the key fob as a transmitter, which communicates with the vehicle as it comes close. The key is identified using one of several antennas around the body of the vehicle and a radio pulse generator in the key housing. Depending on the system, the vehicle is automatically unlocked when a button or sensor on the door handle or trunk release is depressed. ● **SEE FIGURE 26–33**.

Vehicles with a passive (smart) key system can also have a mechanical backup, usually in the form of a key blade built into the key fob. Vehicles with a smart key system can be started without inserting a key in the ignition, provided the driver has the key fob inside the vehicle. On most vehicles, this is done most often by pressing a start button. When leaving a vehicle equipped with a smart key system, the vehicle is locked, depending on the make, model, and year of manufacture of vehicle, by:

- pressing a button on one of the door handles
- touching a capacitive area on a door handle
- simply walk away from the vehicle and the door will lock when the key fob is further away than 15 feet (5 meters).

TECH TIP

Do Not Have Other Keys Near

Whenever diagnosing an immobilizer system, keep other key fobs away from the area. If another key fob were close, it could be transmitting a signal that is not recognized by the vehicle and the security system could prevent proper vehicle operation. Even having other metal objects near the key can affect the strength of the electromagnetic pulses and could interfere with the immobilizer system and prevent it from working as designed. ● **SEE FIGURE 26–34**.

IMMOBILIZER SYSTEM OPERATION

When the ignition key in inserted, the transceiver sends out an electromagnetic energy pulse. This energy pulse is received by the coil inside the key transponder, which creates a voltage. The information or data in the magnetic pulses is in the form of a frequency modulated signal.

A typical immobilizer system consists of transponder key, coil antenna, key reminder switch, separate immobilizer module, PCM, and security light. Most immobilizer systems work as follows:

- The key identification (ID) numbers are stored in a non-volatile memory of the immobilizer module. At each start, the module compares the ID number of the transponder key used with those stored in the memory.

- If the verification has been successful, the immobilizer module sends a request signal to the PCM to compare the key ID number with the numbers registered in the PCM.
- Each immobilizer module has its unique code word that is stored in the PCM. After the verification of the ID number, the immobilizer module requests the code word from the PCM.
- The immobilizer module controls the starter circuit and the security light and signals the PCM to activate fuel injection and ignition when the ID number and code word verification have been successful.
- The signals between immobilizer module and PCM are transmitted via a serial data line.

SECURITY LIGHT OPERATION Normal operation of the security light includes a self-test and flashes a few times then goes out. However, if a fault is detected, the security light will continue to flash and the engine may not start. If a fault occurs with the immobilizer system when the engine is running, then the security light will come on but the engine will not be shut off as this condition is not a theft attempt.

TYPICAL IMMOBILIZER CIRCUITS The diagnostic process involved with positively identifying the defective security system component can be quick and accurate. At the transceiver, check for power, ground, and proper communication on data transmission lines. ● **SEE FIGURE 26–35**.

CAUTION: Do not leave the key in the ignition as this will often keep the immobilizer system alive and will drain the vehicle battery. If leaving the vehicle, take the key out of the ignition and place it 15 feet (5 meters) away to help avoid possible issues.

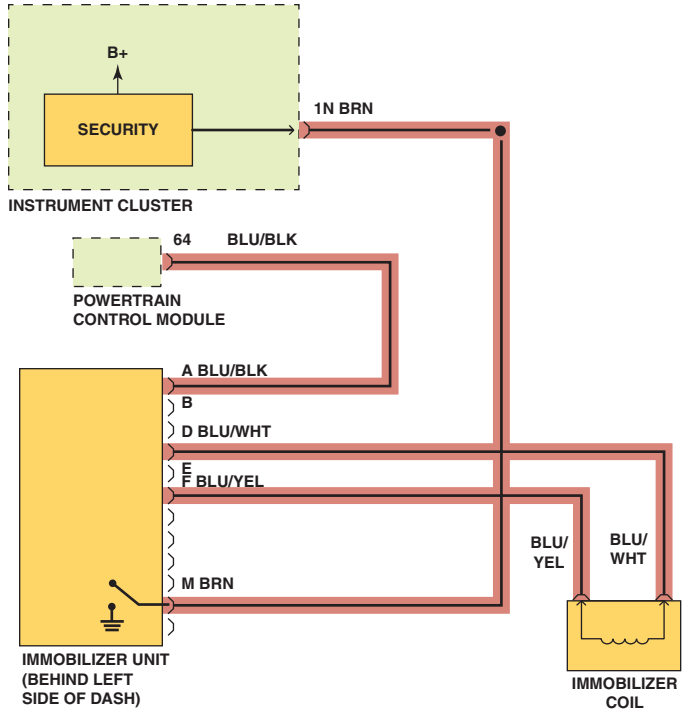

FIGURE 26–35 Check service information for the exact wiring diagram (schematic) for the vehicle being tested. Highlighting the wires and noting their color will help when following the specified testing procedures.

CHRYSLER IMMOBILZER SYSTEM

Beginning in 1998, Chrysler started a security system known as the **Sentry Key Immobilizer System (SKIS)**. When an attempt to start a vehicle arises, the onboard computer sends out a radio-frequency (RF) signal that is read by the electronic transponder chip embedded in the key. The transponder then returns a unique signal back to the SKIS, giving it the okay for the vehicle to start and continue to run. This all happens in under a second, and is completely transparent to the vehicle driver. For additional security, two preprogrammed keys are needed in order to register additional keys into the system. In the event of the loss of all keys, special programming equipment is needed to register new keys into the system.

CHRYSLER SELF-PROGRAMMING ADDITIONAL SENTRY KEYS (REQUIRES TWO ORIGINAL KEYS)

Quick steps:

STEP 1 Purchase a blank key and have it cut to fit the lock cylinder.

STEP 2 Insert the original key #1 into the ignition and turn to on.

STEP 3 Wait 5 seconds and turn the key to off.

STEP 4 Immediately insert the original key #2 into the ignition and turn to on.

STEP 5 Wait 10 seconds for the SKIS indicator in the dash to start to flash.

STEP 6 Turn the ignition off, insert the new blank key, and turn the ignition back on.

STEP 7 Once the SKIS light stops flashing and turns off, the new key is programmed.

FIGURE 26–36 A special tool is needed to diagnose a General Motors VATS security system and special keys that contain a resistor pellet.

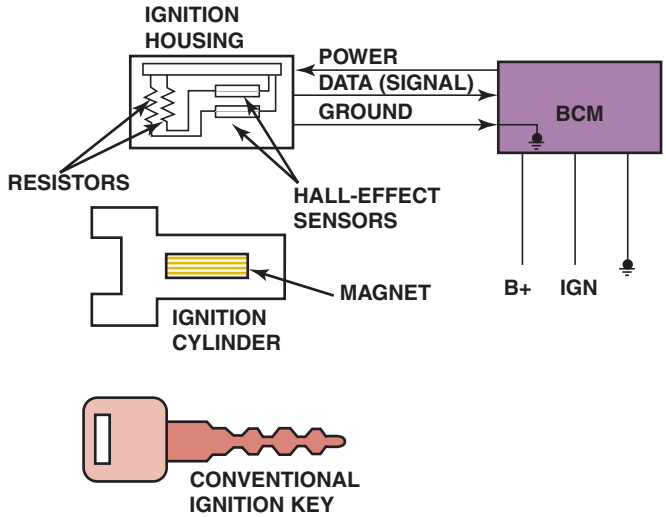

FIGURE 26–37 The Passlock series of General Motors security systems uses a conventional key. The magnet is located in the ignition lock cylinder and triggers the Hall-effect sensors.

FORD PATS SYSTEM

Ford uses a responder key for their antitheft system, which is called the **Passive Antitheft System (PATS)**.

FORD PROGRAMMING FOR ADDITIONAL (PATS) KEYS

This procedure will work only if two or more programmed ignition keys are available. The steps are as follows:

STEP 1 Insert the first programmed ignition key into the ignition lock cylinder. Turn the ignition switch from the LOCK to RUN position (ignition switch must stay in the RUN position for 1 second). Turn the ignition switch to the LOCK position and remove the ignition key from the ignition lock cylinder.

STEP 2 Within 5 seconds of turning the ignition switch to the LOCK position, insert the second programmed ignition key into the ignition lock cylinder. Turn the ignition switch from the LOCK to RUN position (ignition switch must stay in the RUN position for 1 second). Turn the ignition switch to the LOCK position and remove the second ignition key from the ignition lock cylinder.

STEP 3 Within 5 seconds of turning the ignition switch to the LOCK position, insert a new unprogrammed ignition key into the ignition lock cylinder. Turn the ignition switch from the LOCK to RUN position (the ignition switch must stay in the RUN position for 1 second). Turn the ignition switch to the LOCK position and remove the ignition key from the ignition lock cylinder. The new ignition key should now be programmed.

GENERAL MOTORS ANTITHEFT SYSTEM

The type of antitheft system used on General Motors vehicles has included many different systems starting with an antitheft system that used a resistor pellet in the ignition key. If the key fit the lock cylinder and the resistance was the correct value, the engine would crank and start. This system was called the **Vehicle Antitheft System, or VATS**. A special tester was required to test this system. ● **SEE FIGURE 26–36**.

Newer systems include the **Passkey I and Passkey II**, which also use a resistor pellet in the ignition key. **Passlock I, Passlock II,** and **Passlock III** systems use a Hall-effect sensor and magnets in the lock cylinder with a conventional key. ● **SEE FIGURE 26–37**.

TESTING IMMOBILIZER SYSTEMS

DIAGNOSTIC STEPS Most vehicle manufacturers recommend a series of steps that a technician should follow when diagnosing a fault with the immobilizer system.

STEP 1 **Verify the Customer Concern**—A fault with the immobilizer system will often cause the engine to not start or start then stall. Faults can also be intermittent because many systems will "time out" after 20 minutes if an error

DTC	DESCRIPTION OF FAULT
P0513	Incorrect Immobilizer Key
P1570	Fault in antenna detected
P1517	Reference code not compatible with ECM
P1572	Communications failure with ECM
B2957	Security System Data Circuit Low
B2960	Security System Data Wrong But Valid

CHART 26–2

Sample diagnostic trouble codes for an immobilizer system. These codes vary by make, model, and year of manufacture, so check service information for the exact vehicle being diagnosed.

FIGURE 26–38 After checking for stored diagnostic trouble codes (DTCs), the wise technician checks service information for any technical service bulletins (TSBs) that may relate to the vehicle being serviced.

occurs and then works normally after the wait period. A "no-start" condition can also occur that is not associated with the immobilizer system and should be handled using normal diagnostic procedures as specified by the vehicle manufacturer for a no-start condition.

STEP 2 **Visual Inspection**—Most vehicle manufacturers specify that the first step after the customer concern has been verified is that a visual inspection be performed. A visual inspection includes checking the security light status. A typical security light status includes:

- **Normal**—The security dash lamp comes on for 2 to 5 seconds for a bulb check when the ignition is turned on, then goes out.
- **Tamper mode**—The security lamp flashes about once per second if the system detects a bad key, lock cylinder, or security-related wiring problem. The engine will not start or if it does start will not continue to run.
- **Fail enable mode**—If a fault with the security system occurs when the vehicle is running, the security light will remain on but the immobilizer system will be disabled because it is apparently not a theft attempt. Therefore, the engine will start and run as normal except that the security warning light on the dash will be on all the time.

STEP 3 **Check for Diagnostic Trouble Codes**—Use a factory or enhanced factory level aftermarket scan tool and retrieve diagnostic trouble codes. Check service information for the exact codes for the vehicle being serviced. ● **SEE CHART 26–2** for some sample DTCs and their meaning.

STEP 4 **Check for Technical Service Bulletins**—Technical service bulletins (TSBs) are issued by vehicle and aftermarket manufacturers to inform technicians of a situation or technical problem and give the corrective steps and a list of parts needed to solve the problem. Any diagnostic trouble codes should be retrieved before looking at the technical service bulletins because many bulletins include what DTCs may or may not be present. ● **SEE FIGURE 26–38**.

STEP 5 **Perform Pinpoint Tests**—Following the specified diagnostic steps found in service information, check the system for proper voltage at each of the components.

STEP 6 **Determine the Root Cause**—By following the specified diagnostic routine, the root cause can often be determined. If a module is replaced, it will usually have to be programmed to accept the ignition key and this can be a huge problem if a used module is chosen instead of a new one. Always check service information for the exact procedure to follow.

STEP 7 **Verify the Repair**—After the repairs or service procedures have been performed, verify that the system is working as designed. If needed, operate the vehicle under the same conditions that it was when the customer concern was corrected to verify the repair. Document the work order and return the vehicle to the customer in clean condition.

DOOR PANEL REMOVAL

1 Looking at the door panel there appears to be no visible fasteners.

2 Gently prying at the edge of the light shows that it snaps in place and can be easily removed.

3 Under the red "door open" warning light is a fastener.

4 Another screw is found under the armrest.

5 A screw is removed from the bezel around the interior door handle.

6 The electric control panel is held in by clips.

7 Another screw is found after the control panel is removed.

8 The panel beside the outside mirror is removed by gently prying.

9 A gentle tug and the door panel is removed.

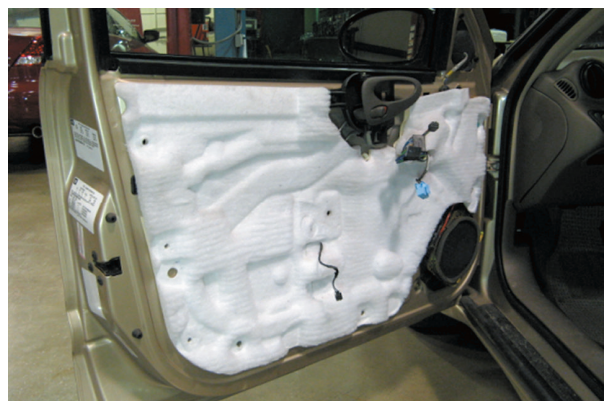

10 The sound-deadening material also acts as a moisture barrier and would need to be removed to gain access to the components inside the door.

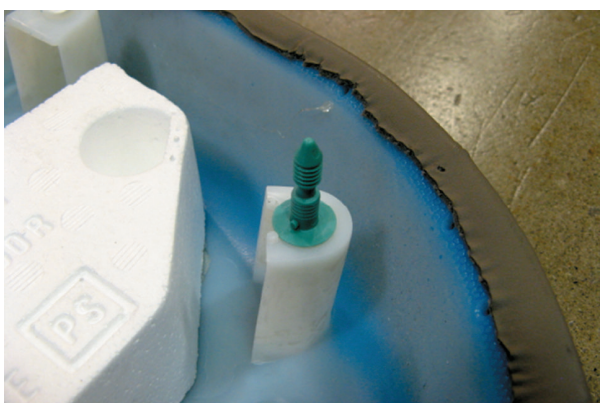

11 Carefully inspect the door panel clips before reinstalling the door panel.

12 Align and press the door panel clips into the openings and reinstall all of the fasteners and components.

SUMMARY

1. Most power windows and power door locks use a permanent magnet motor that has a built-in circuit breaker and is reversible. The control switches and relays direct the current through the motors.
2. The current flow through a rear window defogger is often self-regulating. As the temperature of the grid increases, its resistance increases, reducing current flow. Some rear window defoggers are also used as radio antennas.
3. Radar cruise control systems use many of the same components as the precollision system.
4. Remote keyless entry systems use a wireless transmitter built into the key fob to operate the power door lock.
5. Factory antitheft systems must function properly to allow the engine to crank and/or start.

REVIEW QUESTIONS

1. How do power door locks on a four-door vehicle function with only one ground wire connection?
2. How does a rear window defogger regulate how much current flows through the grids based on temperature?
3. What is the usual procedure to follow to resynchronize a remote keyless entry transmitter?
4. How do heated and cooled seats operate?

CHAPTER QUIZ

1. The owner of a vehicle equipped with cruise control complains that the cruise control often stops working when driving over rough or bumpy pavement. Technician A says the brake switch may be out of adjustment. Technician B says a defective servo unit is the most likely cause. Which technician is correct?
   a. Technician A only
   b. Technician B only
   c. Both Technicians A and B
   d. Neither Technician A nor B
2. Technician A says that the cruise control on a vehicle that uses an electronic throttle control (ETC) system uses a servo to move the throttle. Technician B says that the cruise control on a vehicle with ETC uses the APP sensor to set the speed. Which technician is correct?
   a. Technician A only
   b. Technician B only
   c. Both Technicians A and B
   d. Neither Technician A nor B
3. All power windows fail to operate from the independent switches but all power windows operate from the master switch. Technician A says the window lockout switch may be on. Technician B says the power window relay could be defective. Which technician is correct?
   a. Technician A only
   b. Technician B only
   c. Both Technicians A and B
   d. Neither Technician A nor B
4. Technician A says that a defective ground connection at the master control switch (driver's side) could cause the failure of all power windows. Technician B says that if *one* control wire is disconnected, all windows will fail to operate. Which technician is correct?
   a. Technician A only
   b. Technician B only
   c. Both Technicians A and B
   d. Neither Technician A nor B
5. A typical radar cruise control system uses _____.
   a. Long-range radar (LRR)
   b. Short-range radar (SRR)
   c. Electronic throttle control system to control vehicle speed
   d. All of the above
6. When checking the operation of a rear window defogger with a voltmeter, _____.
   a. The voltmeter should be set to read AC volts
   b. The voltmeter should read close to battery voltage anywhere along the grid
   c. Voltage should be available anytime at the power side of the grid because the control circuit just completes the ground side of the heater grid circuit
   d. The voltmeter should indicate decreasing voltage when the grid is tested across the width of the glass

7. PM motors used in power windows, mirrors, and seats can be reversed by _____.
   a. Sending current to a reversed field coil
   b. Reversing the polarity of the current to the motor
   c. Using a reverse relay circuit
   d. Using a relay and a two-way clutch
8. If only one power door lock is inoperative, a possible cause is a _____.
   a. Poor ground connection at the power door lock relay
   b. Defective door lock motor (or solenoid)
   c. Defective (open) circuit breaker for the power circuit
   d. Defective (open) fuse for the control circuit
9. A keyless remote control stops working. Technician A says the battery in the remote could be dead. Technician B says that the key fob may have to be resynchronized. Which technician is correct?
   a. Technician A only
   b. Technician B only
   c. Both Technicians A and B
   d. Neither Technician A nor B
10. Two technicians are discussing antitheft systems. Technician A says that some systems require a special key. Technician B says that some systems use a computer chip in the key. Which technician is correct?
   a. Technician A only
   b. Technician B only
   c. Both Technicians A and B
   d. Neither Technician A nor B